Instructions – Parts List

CARBON STEEL

Dura-Flo™ 1800 Pumps

308147Y
ENG

With Severe–Duty Rod and Cylinder

Important Safety Instructions
Read all warnings and instructions in this manual.
Save these instructions.

See page 2 for **List of Models** and **Table of Contents.**

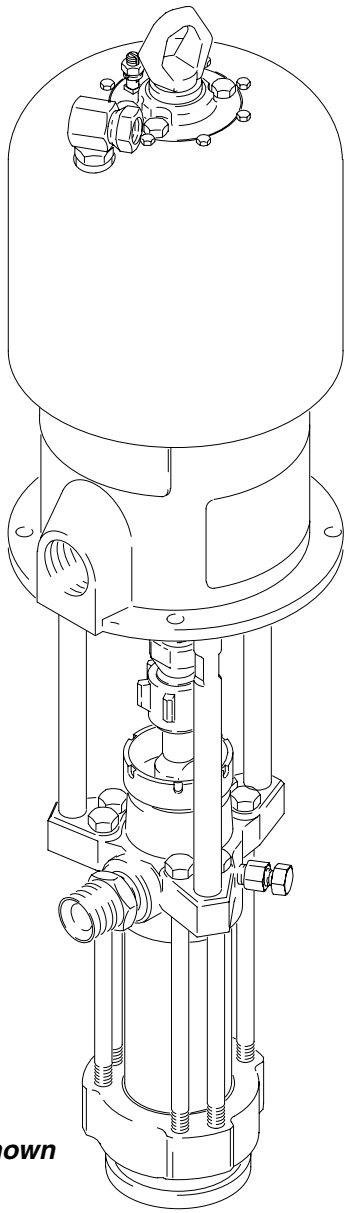

Part No. 222837 Shown

PROVEN QUALITY. LEADING TECHNOLOGY.

List of Models

Pump Part No. and Series	Pump Model	Ratio	Maximum Fluid Working Pressure	Maximum Air Input Pressure (or Hydraulic Input Pressure*)
222837, Series A	King™	28:1	19.3 MPa, 193 bar (2800 psi)	0.7 MPa, 7 bar (100 psi)
222891, Series B	Quiet King™	28:1	19.3 MPa, 193 bar (2800 psi)	0.7 MPa, 7 bar (100 psi)
237555, Series B	Premier™	45:1	31 MPa, 310 bar (4500 psi)	0.7 MPa, 7 bar (100 psi)
241490, Series A	Premier™	45:1	31 MPa, 310 bar (4500 psi)	0.7 MPa, 7 bar (100 psi)
233127, Series A	Premier™	45:1	31 MPa, 310 bar (4500 psi)	0.7 MPa, 7 bar (100 psi)
233128, Series A	Premier™	45:1	31 MPa, 310 bar (4500 psi)	0.7 MPa, 7 bar (100 psi)
222892, Series B	Viscount®	—	18 MPa, 179 bar (2600 psi)	10 MPa, 103 bar (1500 psi)*

Table of Contents

Warnings 3
Installation 6
Air-Powered Pumps 8
Hydraulic-Powered Pumps 10
Operation/Maintenance 12
All Pumps 12
Air-Powered Pumps 13
Hydraulic-Powered Pumps 14
Troubleshooting Chart 16
Service 17
Required Tools 17
Disconnecting the Displacement Pump 17
Reconnecting the Displacement Pump 18
Displacement Pump Service 20
Parts 24
Pump Assemblies 24
Displacement Pumps 29
Packing Conversion Kits 30
Technical Data 32
Dimensions 36
Mounting Hole Layouts 37
Warranty 38
Graco Information . . . . . NO TAG

Symbols

Warning Symbol

⚠ WARNING

This symbol alerts you to the possibility of serious injury or death if you do not follow the instructions.

Caution Symbol

⚠ CAUTION

This symbol alerts you to the possibility of damage to or destruction of equipment if you do not follow the instructions.

⚠ WARNING

INSTRUCTIONS

EQUIPMENT MISUSE HAZARD

Equipment misuse can cause the equipment to rupture or malfunction and result in serious injury.

- This equipment is for professional use only.
- Read all instruction manuals, tags, and labels before operating the equipment.
- Use the equipment only for its intended purpose. If you are not sure, call your Graco distributor.
- Do not alter or modify this equipment. Use only genuine Graco parts and accessories.
- Check equipment daily. Repair or replace worn or damaged parts immediately.
- Do not exceed the maximum working pressure of the lowest rated system component. Refer to the **Technical Data** on pages 32–35 for the maximum working pressure of this equipment.
- Use fluids and solvents which are compatible with the equipment wetted parts. Refer to the **Technical Data** section of all equipment manuals. Read the fluid and solvent manufacturer's warnings.
- Do not kink or overbend hoses or use hoses to pull equipment.
- Route hoses away from traffic areas, sharp edges, moving parts, and hot surfaces. Do not expose Graco hoses to temperatures above 82°C (180°F) or below –40°C (–40°F).
- Wear hearing protection when operating this equipment.
- Do not lift pressurized equipment.
- Comply with all applicable local, state, and national fire, electrical, and safety regulations.

⚠ WARNING

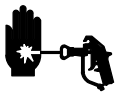

SKIN INJECTION HAZARD

Spray from the gun, leaks or ruptured components can inject fluid into your body and cause extremely serious injury, including the need for amputation. Fluid splashed in the eyes or on the skin can also cause serious injury.

- Fluid injected into the skin might look like just a cut, but it is a serious injury. **Get immediate surgical treatment.**
- Do not point the gun at anyone or at any part of the body.
- Do not put your hand or fingers over the spray tip.
- Do not stop or deflect leaks with your hand, body, glove or rag.
- Do not “blow back” fluid; this is not an air spray system.
- Always have the tip guard and the trigger guard on the gun when spraying.
- Check the gun diffuser operation weekly. Refer to the gun manual.
- Be sure the gun trigger safety operates before spraying.
- Lock the gun trigger safety when you stop spraying.
- Follow the **Pressure Relief Procedure** on page 12 if the spray tip clogs and before cleaning, checking or servicing the equipment.
- Tighten all fluid connections before operating the equipment.
- Check the hoses, tubes, and couplings daily. Replace worn or damaged parts immediately. Do not repair high pressure couplings; you must replace the entire hose.

MOVING PARTS HAZARD

Moving parts, such as the air motor piston, can pinch or amputate your fingers.

- Keep clear of all moving parts when starting or operating the pump.
- Before servicing the equipment, follow the **Pressure Relief Procedure** on page 12 to prevent the equipment from starting unexpectedly.

⚠ WARNING

FIRE AND EXPLOSION HAZARD

Improper grounding, poor ventilation, open flames or sparks can cause a hazardous condition and result in a fire or explosion and serious injury.

- Ground the equipment and the object being sprayed. Refer to **Grounding** on page 6.
- If there is any static sparking or you feel an electric shock while using this equipment, **stop spraying immediately.** Do not use the equipment until you identify and correct the problem.
- Provide fresh air ventilation to avoid the buildup of flammable fumes from solvents or the fluid being sprayed.
- Keep the spray area free of debris, including solvent, rags, and gasoline.
- Electrically disconnect all equipment in the spray area.
- Extinguish all open flames or pilot lights in the spray area.
- Do not smoke in the spray area.
- Do not turn on or off any light switch in the spray area while operating or if fumes are present.
- Do not operate a gasoline engine in the spray area.
- Keep a fire extinguisher in the work area.

TOXIC FLUID HAZARD

Hazardous fluid or toxic fumes can cause serious injury or death if splashed in the eyes or on the skin, inhaled, or swallowed.

- Know the specific hazards of the fluid you are using.
- Store hazardous fluid in an approved container. Dispose of hazardous fluid according to all local, state and national guidelines.
- Always wear protective eyewear, gloves, clothing and respirator as recommended by the fluid and solvent manufacturer.

Installation

(ALL PUMPS)

Grounding

⚠ WARNING

FIRE AND EXPLOSION HAZARD
Before operating the pump, ground the system as explained below. Also read the section **FIRE OR EXPLOSION HAZARD** on page 5.

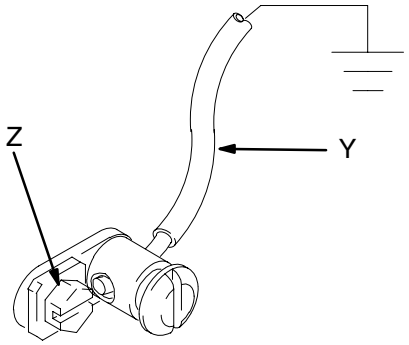

Fig. 1

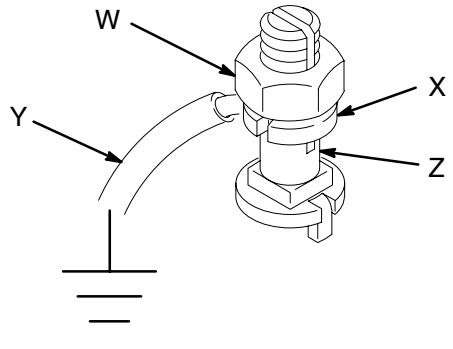

Fig. 2

1. *King Pumps:* use a ground wire and clamp. See Fig. 1. Remove the ground screw (Z) and insert through eye of ring terminal at the end of ground wire (Y). Fasten ground screw back onto pump and tighten securely. Connect the other end of ground wire to a true earth ground. Order Part No. 222011 Ground Wire and Clamp.

   All Other Pumps: use a ground wire and clamp. See Fig. 2. Loosen the grounding lug locknut (W) and washer (X). Insert one end of a 1.5 mm@ (12 ga) minimum ground wire (Y) into the slot in lug (Z) and tighten the locknut securely. Connect the other end of the wire to a true earth ground. Order Part No. 237569 Ground Wire and Clamp.

2. *Air, hydraulic, and fluid hoses:* use only electrically conductive hoses.

3. *Air compressor or hydraulic power supply:* follow manufacturer's recommendations.

4. *Spray gun:* ground through connection to a properly grounded fluid hose and pump.

5. *Fluid supply container:* follow your local code.

6. *Object being sprayed:* follow your local code.

7. *Solvent pails used when flushing:* follow your local code. Use only metal pails, which are conductive, placed on a grounded surface. Do not place the pail on a nonconductive surface, such as paper or cardboard, which interrupts the grounding continuity.

8. *To maintain grounding continuity when flushing or relieving pressure*, hold a metal part of the spray gun firmly to the side of a grounded *metal* pail, then trigger the gun.

Notes

Installation

(AIR-POWERED PUMPS)

NOTE: Reference numbers and letters in parentheses in the text refer to the callouts in the figures and the parts drawing.

Fig. 3 is only a guide for selecting and installing system components and accessories. Contact your Graco distributor for assistance in designing a system to suit your particular needs.

Assembling Models 237555, 233127, and 233128

If you have Models 237555, 233127, or 233128 Pumps, assemble the displacement pump (105) to the Premier air motor (101) as instructed on page 18.

TYPICAL INSTALLATION

KEY

- **A** Pump
- **B** Wall Bracket
- **C** Pump Runaway Valve
- **D** Air Line Lubricator
- **E** Bleed-Type Master Air Valve (required, for pump)
- **F** Pump Air Regulator
- **G** Air Manifold
- **H** Electrically Conductive Air Supply Hose
- **J** Air Line Filter
- **K** Bleed-Type Master Air Valve (for accessories)
- **L** Fluid Filter
- **M** Fluid Drain Valve (required)
- **N** Electrically Conductive Fluid Supply Hose
- **P** Fluid Whip Hose
- **R** Gun/Valve Swivel
- **S** Airless Spray Gun or Dispensing Valve
- **T** Drum Suction Kit
- **Y** Ground Wire (required; see page 6 for installation instructions)

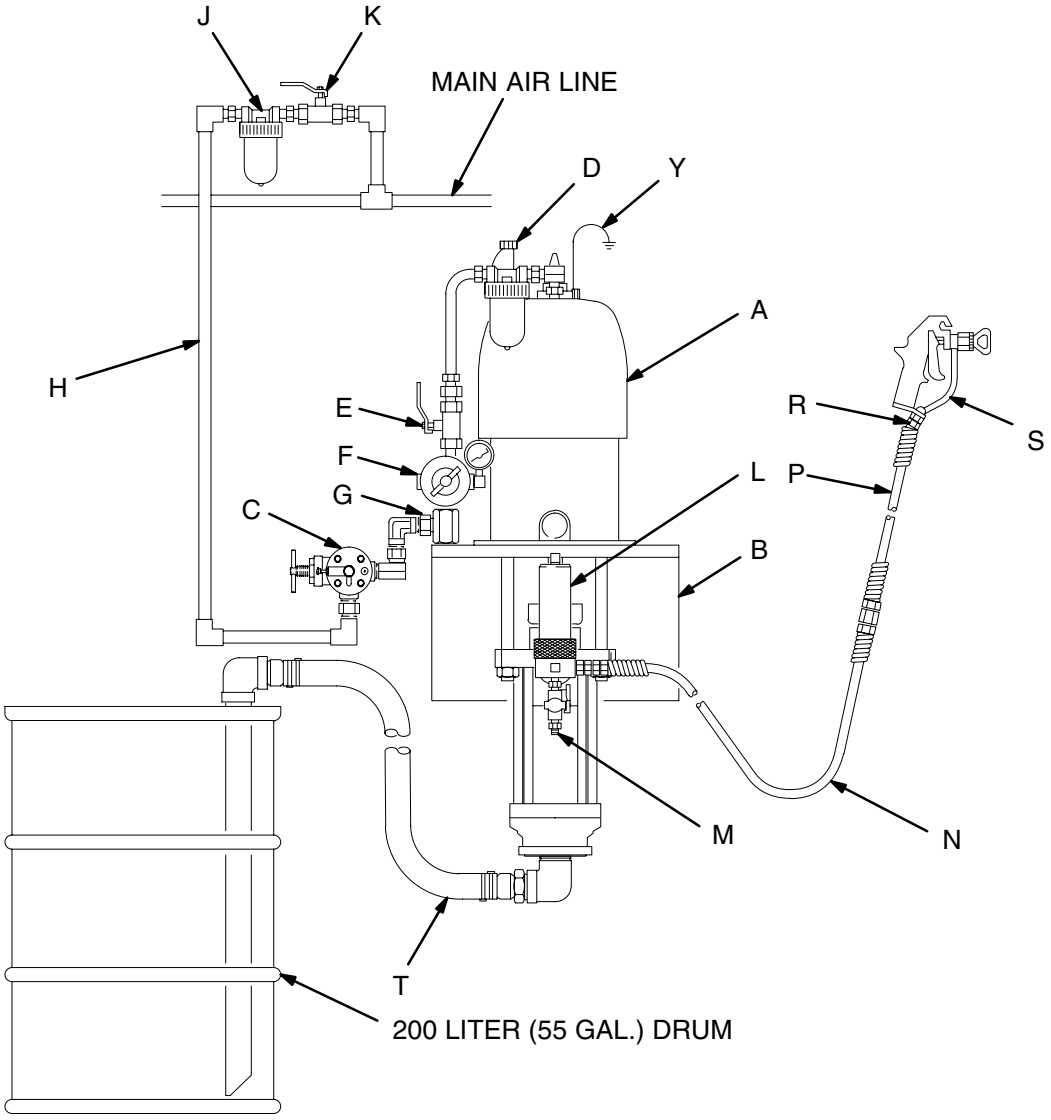

0626C

Fig. 3

Installation

(AIR-POWERED PUMPS)

SYSTEM ACCESSORIES

⚠ WARNING

A bleed-type master air valve (E) and a fluid drain valve (M) are required in your system. These accessories help reduce the risk of serious injury, including fluid injection and splashing of fluid in the eyes or on the skin, and injury from moving parts if you are adjusting or repairing the pump.

The bleed-type master air valve relieves air trapped between this valve and the pump after the air is shut off. Trapped air can cause the pump to cycle unexpectedly. Locate the valve close to the pump.

The fluid drain valve assists in relieving fluid pressure in the displacement pump, hose, and gun. Triggering the gun to relieve pressure may not be sufficient.

Air and Fluid Hoses

Be sure all air hoses (H) and fluid hoses (N and P) are properly sized and pressure-rated for your system. Use only electrically conductive hoses. Fluid hoses must have spring guards on both ends. Use a whip hose (P) and a swivel (R) between the main fluid hose (N) and the gun/valve (S) to allow freer gun/valve movement.

Mounting Accessories

⚠ WARNING

For Model 222939 Premier Pump, do not lift the pump by the lift ring when the total weight exceeds 550 lb (250 kg).

Mount the pump (A) to suit the type of installation planned. Fig. 3 illustrates a wall-mounted system. Pump dimensions and the mounting hole layout are shown on pages 36 and 37.

If you are using an elevator or a cart, refer to the separate manuals supplied with those components for installation and operation instructions.

Air Line Accessories

Install the following accessories in the order shown in Fig. 3, using adapters as necessary:

- **An air line lubricator (D)** provides automatic air motor lubrication.
- **A bleed-type master air valve (E)** is required in your system to relieve air trapped between it and the air motor when the valve is closed (see the **WARNING** above). Be sure the bleed valve is easily accessible from the pump, and is located **downstream** from the air regulator.
- **An air regulator (F)** controls pump speed and outlet pressure by adjusting the air pressure to the pump. Locate the regulator close to the pump, but **upstream** from the bleed-type master air valve.
- **A pump runaway valve (C**) senses when the pump is running too fast and automatically shuts off the air to the motor. A pump which runs too fast can be seriously damaged.
- **An air manifold (G)** has a swivel air inlet. It mounts to a wall bracket, and provides ports for connecting lines to air-powered accessories.
- **An air line filter (J)** removes harmful dirt and moisture from the compressed air supply.
- **A second bleed-type air valve (K)** isolates the air line accessories for servicing. Locate upstream from all other air line accessories.

Fluid Line Accessories

Install the following accessories in the positions shown in Fig. 3, using adapters as necessary:

- **A fluid filter (L)** with a 60 mesh (250 micron) stainless steel element, to filter particles from the fluid as it leaves the pump. It includes a **fluid drain valve (M),** which is required in your system to relieve fluid pressure in the hose and gun (see the **WARNING** at left).
- **A gun or valve (S)** dispenses the fluid. The gun shown in Fig. 3 is an airless spray gun for light to medium viscosity fluids.
- **A gun swivel (R)** allows freer gun movement.
- **A suction kit (T)** allows the pump to draw fluid from a 200 liter (55 gallon) drum.

Installation

(HYDRAULIC-POWERED PUMPS)

NOTE: Reference numbers and letters in parentheses in the text refer to the callouts in the figures and the parts drawing.

NOTE: Accessories are available from your Graco distributor. If you supply your own accessories, be sure they are adequately sized and pressure-rated to meet the system's requirements.

Fig. 4 is only a guide for selecting and installing system components and accessories. Contact your Graco distributor for assistance in designing a system to suit your particular needs.

⚠ CAUTION

It is very important to keep the hydraulic supply system clean at all times. Be sure that all hydraulic fluid lines are absolutely clean. Blow out the lines with air and flush thoroughly with solvent before connecting to the hydraulic motor, to avoid introducing harmful contaminants into the motor. Plug the hydraulic lines immediately when they are disconnected.

Do not exceed 37.8 liter/min (10 gpm) hydraulic oil volume to the motor, to avoid stalling the pump.

For optimum pump performance, keep the temperature of the hydraulic oil below 54°C (130°F).

TYPICAL INSTALLATION

KEY

- **A** Pump
- **B** Wall Bracket
- **C** Hydraulic Supply Line
- **D** Hydraulic Return Line
- **E** Drain Line (from pressure reducing valve)
- **F** Pressure Gauge
- **G** Flow Control Valve
- **H** Pressure Reducing Valve
- **J** Accumulator
- **K** Drain Line (from motor drip pan)
- **L** Fluid Filter
- **M** Fluid Drain Valve (required)
- **N** Electrically Conductive Fluid Supply Hose
- **P** Fluid Whip Hose
- **R** Gun/Valve Swivel
- **S** Airless Spray Gun or Dispensing Valve
- **T** Drum Suction Kit
- **U** Hydraulic Supply Line Shutoff Valve
- **V** Hydraulic Return Line Shutoff Valve
- **Y** Ground Wire (required, see page 6 for installation instructions)
- **AA** Hydraulic Return Line Filter

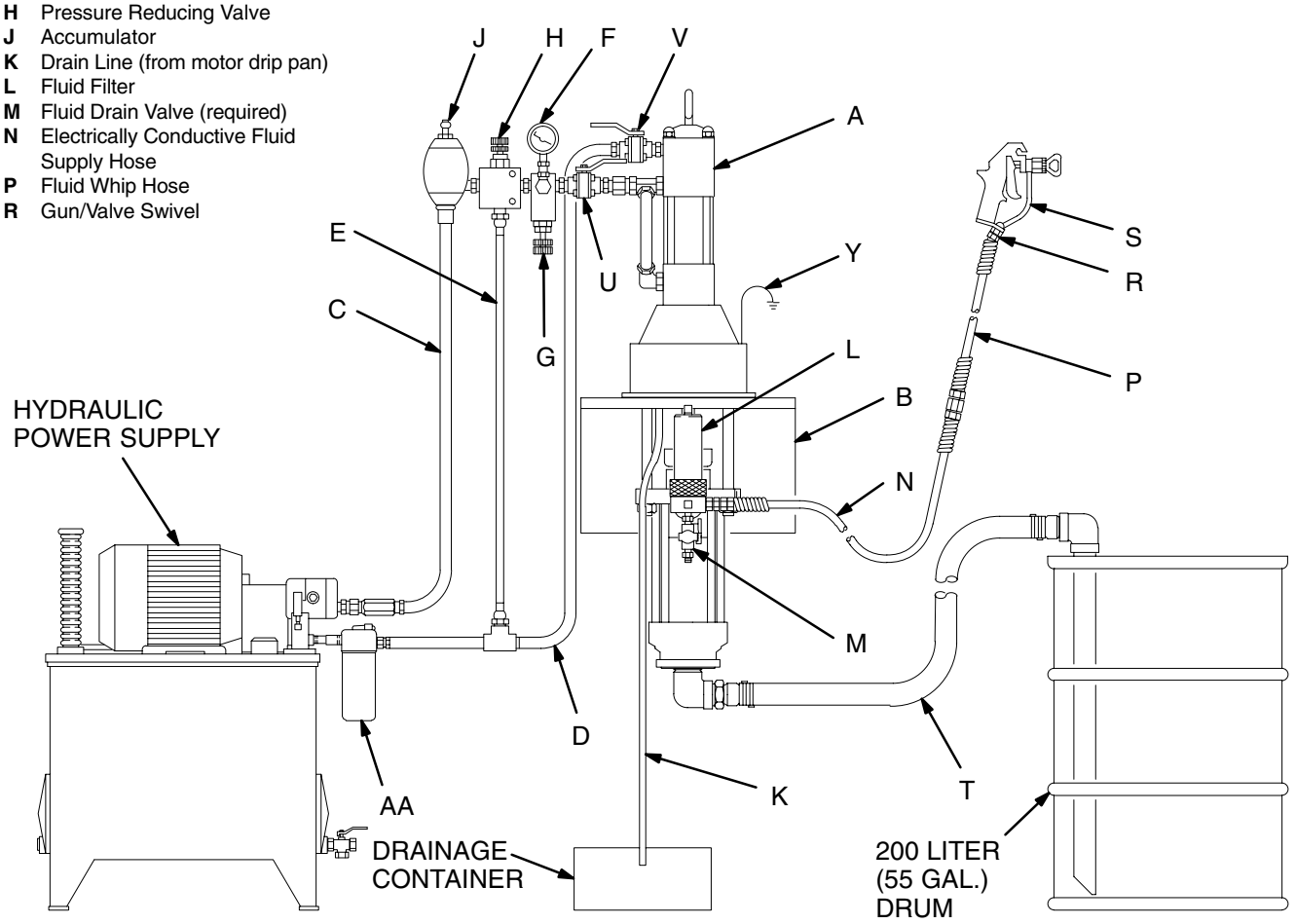

Fig. 4

Installation

(HYDRAULIC-POWERED PUMPS)

SYSTEM ACCESSORIES

⚠ WARNING

A fluid drain valve (M) is required in your system. This accessory helps reduce the risk of serious bodily injury, including fluid injection and splashing of fluid in the eyes or on the skin, and injury from moving parts if you are adjusting or repairing the pump.

The fluid drain valve assists in relieving fluid pressure in the displacement pump, hose, and gun. Triggering the gun to relieve pressure may not be sufficient.

Mounting Accessories

Mount the pump (A) to suit the type of installation planned. Fig. 4 illustrates a wall-mounted system. Pump dimensions and the mounting hole layout are shown on pages 36 and 37.

Filters

Be sure your hydraulic power supply is equipped with a suction filter to the hydraulic pump and a system return line filter (AA) of 10 micron size.

Carefully follow the manufacturer's recommendations on reservoir and filter cleaning, and periodic changes of hydraulic fluid. Use only Graco-approved hydraulic oil. Order Part No. 169236, 5 gal. (19 liter) or 207428, 1 gal. (3.8 liter). Do not substitute a lower grade oil or one with a lower flash point.

Hydraulic Lines

The motor has a 3/4 npt(f) hydraulic oil supply fitting, and a 1 in. npt(f) hydraulic oil return fitting. Use a minimum 13 mm (1/2 in.) ID hydraulic supply line, and a minimum 22 mm (7/8 in.) ID return line.

On the hydraulic supply line (C), install the following accessories in the order shown in Fig. 4, using adapters as necessary:

- **A shutoff valve (U**) isolates the pump for service.
- **A fluid pressure gauge (F)** to monitor hydraulic oil pressure to the motor and to avoid overpressurizing the motor or displacement pump, and **a pressure- and temperature-compensated flow control valve (G)** to prevent the motor from running too fast and possibly damaging itself.
- **A pressure reducing valve (H), with a drain line (E)** run directly to the hydraulic return line (D).
- **An accumulator (J)** to reduce the hammering effect caused by the motor reversing direction.
- **A shutoff valve (V**) isolates the pump for service.
- **A filter (AA**) of 10 micron size.

Hydraulic Motor Drip Pan

The hydraulic motor has a drip pan to collect any leakage. Connect a 6 mm (1/4 in.) ID drain line (K) to the barbed fitting on the drip pan, and place the free end in a container to receive the drainage.

Fluid Supply Hoses

Be sure all fluid supply hoses (N and P) are properly sized and pressure-rated for your system. Use only electrically conductive hoses. Fluid hoses must have spring guards on both ends. Use a whip hose (P) and a swivel (R) between the main fluid hose (N) and the gun/valve (S) to allow freer gun/valve movement.

Fluid Line Accessories

Install the following accessories in the positions shown in Fig. 4, using adapters as necessary:

- **A fluid filter (L)** with a 60 mesh (250 micron) stainless steel element, to filter particles from the fluid as it leaves the pump. It includes a **fluid drain valve (M),** which is required in your system to relieve fluid pressure in the hose and gun (see the **WARNING** at left).
- **A gun or valve (S)** dispenses the fluid. The gun shown in Fig. 4 is an airless spray gun for light to medium viscosity fluids.
- **A gun swivel (R)** allows freer gun movement.
- **A suction kit (T)** allows the pump to draw fluid from a 200 liter (55 gallon) drum.

Operation/Maintenance

(ALL PUMPS)

Pressure Relief Procedure

⚠ WARNING

SKIN INJECTION HAZARD
The system pressure must be manually relieved to prevent the system from starting or spraying accidentally. Fluid under high pressure can be injected through the skin and cause serious injury. To reduce the risk of an injury from injection, splashing fluid, or moving parts, follow the **Pressure Relief Procedure** whenever you:

- are instructed to relieve the pressure,
- stop spraying,
- check or service any of the system equipment,
- or install or clean the spray tips.

1. Lock the gun/valve trigger safety.
2. Shut off the air or hydraulic supply to the pump.
3. *In air-powered systems,* close the bleed-type master air valve (required in your system).

   In hydraulic-powered systems, close the hydraulic supply line valve *first*, then the return line valve.
4. Unlock the gun/valve safety latch.
5. Hold a metal part of the gun firmly to the side of a grounded metal pail, and trigger the gun/valve to relieve pressure.
6. Lock the gun trigger safety.
7. Open the drain valve (required in your system) and/or the pump bleeder valve, having a container ready to catch the drainage.
8. Leave the drain valve open until you are ready to spray/dispense again.

If you suspect that the spray tip or hose is completely clogged, or that pressure has not been fully relieved after following the steps above, very slowly loosen the tip guard retaining nut or hose end coupling and relieve pressure gradually, then loosen completely. Now clear the tip or hose.

Packing Nut/Wet-Cup

Fill the packing nut/wet-cup (3) 1/3 full with Graco Throat Seal Liquid (TSL) or compatible solvent. See Fig. 5. Using the supplied wrench (104), adjust the packing nut weekly so it is just snug; do not overtighten. Follow the **Pressure Relief Procedure** at left.

Flushing the Pump

The pump is tested with lightweight oil, which is left in to protect the pump parts. If the fluid you are using may be contaminated by the oil, flush it out with a compatible solvent before using the pump.

⚠ WARNING

For your safety, read the warning section, **Fire or Explosion Hazard** on page 5 before flushing, and follow all recommendations given there.

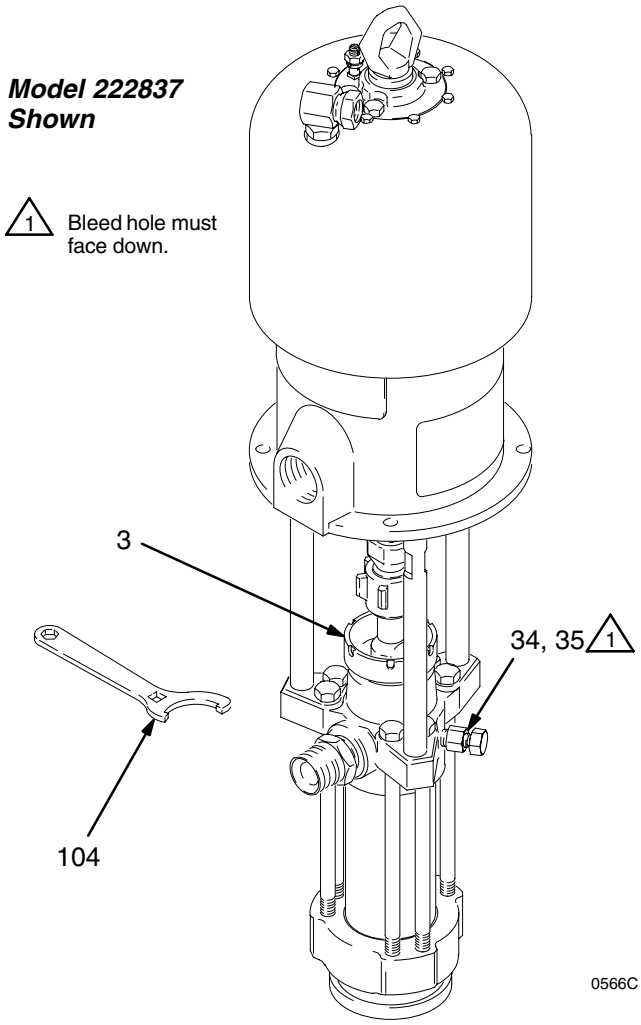

Fig. 5

Operation/Maintenance

(AIR-POWERED PUMPS)

Starting and Adjusting the Pump

1. Refer to Fig. 3 on page 8. Connect the suction kit (T) to the pump's fluid inlet, and place the tube into the fluid supply.

2. Be sure the air regulator (F) is closed. Then open the pump's bleed-type master air valve (E). Hold a metal part of the spray gun/dispensing valve (S) firmly to the side of a grounded metal pail and hold the trigger open. Now slowly open the air regulator until the pump starts.

3. Cycle the pump slowly until all air is pushed out and the pump and hoses are fully primed. Release the gun/valve trigger and lock the trigger safety latch. The pump should stall against pressure when the trigger is released.

⚠ WARNING

SKIN INJECTION HAZARD

To reduce the risk of fluid injection, do not use your hand or fingers to cover the bleed hole on the underside of the bleeder valve body (34) when priming the pump. Use a crescent wrench to open and close the bleeder plug (35). Keep your hands away from the bleed hole.

4. If the pump fails to prime properly, open the bleeder valve (35) slightly. Use the bleed hole on the underside of the valve body (34) as a priming valve until the fluid appears at the hole. See Fig. 5. Close the plug (35).

NOTE: When changing fluid containers with the hose and gun already primed, open the bleeder valve plug (35), to assist in priming the pump and venting air before it enters the hose. Close the bleeder valve when all air has been eliminated.

5. With the pump and lines primed, and with adequate air pressure and volume supplied, the pump will start and stop as the gun/valve is opened and closed. In a circulating system, the pump will speed up or slow down on demand, until the air supply is shut off.

6. Use the air regulator to control the pump speed and the fluid pressure. Always use the lowest air pressure necessary to get the desired results. Higher pressures cause premature tip/nozzle and pump wear.

⚠ WARNING

COMPONENT RUPTURE HAZARD

To reduce the risk of overpressurizing your system, which could cause component rupture and serious injury, *never exceed the specified Maximum Incoming Air Pressure to the pump* (see the **Technical Data** on pages 32–35).

7. Never allow the pump to run dry of the fluid being pumped. A dry pump will quickly accelerate to a high speed, possibly damaging itself. A pump runaway valve (C), which shuts off the air supply to the pump if the pump accelerates beyond the pre-set speed, is available. See Fig. 3 on page 8. If your pump accelerates quickly, or is running too fast, stop it immediately and check the fluid supply. If the supply container is empty and air has been pumped into the lines, refill the container and prime the pump and the lines with fluid, or flush and leave it filled with a compatible solvent. Be sure to eliminate all air from the fluid system.

Shutdown and Care of the Pump

⚠ WARNING

To reduce the risk of serious injury whenever you are instructed to relieve pressure, always follow the **Pressure Relief Procedure** on page 12.

For overnight shutdown, **relieve the pressure.** Stop the pump at the bottom of its stroke to prevent fluid from drying on the exposed displacement rod and damaging the throat packings.

Always flush the pump before the fluid dries on the displacement rod. Never leave water or water-based fluid in the pump overnight. First, flush with water or a compatible solvent, then with mineral spirits. Relieve the pressure, but leave the mineral spirits in the pump to protect the parts from corrosion.

Operation/Maintenance

(HYDRAULIC-POWERED PUMPS)

Starting and Adjusting the Pump

1. Refer to Fig. 4 on page 10. Connect the suction kit (T) to the pump's fluid inlet, and place the tube into the fluid supply.

2. Check the hydraulic fluid level before each use, and add fluid as necessary.

3. Make certain that the supply line shutoff valve (U) and the return line shutoff valve (V) are closed.

4. Start the hydraulic power supply.

5. Hold a metal part of the gun/valve (S) firmly to the side of a grounded metal pail and hold the trigger open.

6. Open the return line shutoff valve (V) *first,* then slowly open the supply line shutoff valve (U).

7. Cycle the pump slowly until all air is pushed out and the pump and hoses are fully primed. Release the gun/valve trigger and engage the safety latch. The pump should stall against pressure when the trigger is released.

⚠ WARNING

SKIN INJECTION HAZARD

To reduce the risk of fluid injection, do not use your hand or fingers to cover the bleed hole on the underside of the bleeder valve body (34) when priming the pump. Use a crescent wrench to open and close the bleeder plug (35). Keep your hands away from the bleed hole.

8. If the pump fails to prime properly, open the bleeder valve (35) slightly. Use the bleed hole, on the underside of the body (34), as a priming valve until the fluid appears at the hole. See Fig. 5. Close the plug (35).

NOTE: When changing fluid containers with the hose and gun already primed, open the bleeder valve plug (35), to assist in priming the pump and venting air before it enters the hose. Close the bleeder valve when all air has been eliminated.

9. With the pump and lines primed, and with adequate hydraulic volume supplied, the pump will start and stop as the gun/valve is opened and closed. In a circulating system, the pump will speed up or slow down on demand, until the hydraulic power supply is shut off.

10. Use the fluid pressure gauge (F) and flow control valve (G) to control the pump speed and the fluid outlet pressure. Always use the lowest hydraulic flow and pressure necessary to get the desired results. Higher pressures cause premature tip/nozzle and pump wear.

⚠ WARNING

COMPONENT RUPTURE HAZARD

To reduce the risk of overpressurizing your system, which could cause component rupture and serious injury, *never exceed 10 MPa, 103 bar (1500 psi) Maximum Hydraulic Input Pressure to the pump, or 140 bar (2000 psi) Maximum Fluid Working Pressure* (see the **Technical Data** on page 35).

To prevent overpressurizing the hydraulic motor or its seals, always shut off the supply line valve (U) *first*, then shut off the return line valve (V).

⚠ CAUTION

Do not allow the hydraulic oil temperature to exceed 54°C (130°F). The pump seals will wear faster and leakage may occur if the pump is operated at higher oil temperatures.

11. Never allow the pump to run dry of the fluid being pumped. A dry pump will quickly accelerate to a high speed, possibly damaging itself. If your pump accelerates quickly, or is running too fast, stop it immediately and check the fluid supply. If the supply container is empty and air has been pumped into the lines, refill the container and prime the pump and the lines with fluid, or flush and leave it filled with a compatible solvent. Be sure to eliminate all air from the fluid system.

Operation/Maintenance

(HYDRAULIC-POWERED PUMPS)

Shutdown and Care of the Pump

⚠ WARNING

To reduce the risk of serious injury whenever you are instructed to relieve pressure, always follow the **Pressure Relief Procedure** on page 12.

For overnight shutdown, **relieve the pressure** on page 12. Stop the pump at the bottom of the stroke to prevent fluid from drying on the exposed displacement rod and damaging the throat packings.

Always flush the pump before the fluid dries on the displacement rod. Never leave water or water-based fluid in the pump overnight. First, flush with water or a compatible solvent, then with mineral spirits. Relieve the pressure, but leave the mineral spirits in the pump to protect the parts from corrosion.

Troubleshooting Chart

⚠ WARNING

To reduce the risk of serious injury whenever you are instructed to relieve pressure, always follow the **Pressure Relief Procedure** on page 12.

1. **Relieve the pressure.**
2. Check all possible causes and problems before disassembling the pump.

PROBLEM	CAUSE	SOLUTION
Pump fails to operate	Restricted line or inadequate air/hydraulic supply; closed or clogged valves	Clear; increase air/hydraulic supply. Check that valves are open.
	Obstructed fluid hose or gun/valve; fluid hose ID is too small	Open, clear*; use hose with larger ID.
	Fluid dried on the displacement rod	Clean; always stop pump at bottom of stroke; keep wet-cup 1/3 filled with compatible solvent.
	Dirty, worn, or damaged motor parts	Clean or repair; see separate motor manual.
Pump operates, but output low on both strokes	Restricted line or inadequate air/hydraulic supply; closed or clogged valves	Clear; increase air/hydraulic supply. Check that valves are open.
	Obstructed fluid hose or gun/valve; fluid hose ID is too small	Open, clear*; use hose with larger ID.
	Bleeder valve open	Close.
	Fluid too heavy for pump priming	Use bleeder valve (see pages 13 and 14); use ram.
	Worn packings in displacement pump	Replace packings.
Pump operates, but output low on downstroke	Held open or worn intake valve	Clear valve; service.
	Fluid too heavy for pump priming	Use bleeder valve (see pages 13 and 14); use ram.
Pump operates, but output low on upstroke	Held open or worn piston valve or packings.	Clear valve; replace packings.
Erratic or accelerated pump speed	Exhausted fluid supply	Refill and prime.
	Fluid too heavy for pump priming	Use bleeder valve (see pages 13 and 14); use ram.
	Held open or worn piston valve or packings.	Clear valve; replace packings.
	Held open or worn intake valve	Clear valve; service.

* To determine if the fluid hose or gun is obstructed, **relieve the pressure**. Disconnect the fluid hose and place a container at the pump fluid outlet to catch any fluid. Turn on the air/hydraulic power just enough to start the pump. If the pump starts when the air/hydraulic power is turned on, the obstruction is in the fluid hose or gun.

Service

Required Tools

- Set of socket wrenches
- Set of adjustable wrenches
- 24 in. adjustable wrench
- Torque wrench
- Rubber mallet
- Arbor press
- Soft wooden block (approx. 1 square foot in size)
- Large vise, with soft jaws
- Thread lubricant
- Anti-seize lubricant 222955
- Loctite® 2760™ or equivalent

NOTE: Service Tool 109507 is available as an accessory. The tool fits over the top of the displacement rod, making it easier to apply a 24 inch adjustable wrench or 3/4 in. drive socket when connecting or disconnecting the rod from the piston assembly.

Disconnecting the Displacement Pump

⚠ WARNING

To reduce the risk of serious injury whenever you are instructed to relieve pressure, always follow the **Pressure Relief Procedure** on page 12.

1. Flush the pump, if possible. Stop the pump at the bottom of its stroke. **Relieve the pressure.**

2. Disconnect the air or hydraulic hose. Plug all hydraulic hoses immediately, to prevent contamination of the hydraulic system. Hold the fluid outlet fitting (4) with a wrench to keep it from being loosened while you disconnect the fluid hose.

⚠ WARNING

For Model 222939 Premier Pump, do not lift the pump by the lift ring when the total weight exceeds 550 lb (250 kg).

3. Disconnect the displacement pump (105) from the motor (101) as follows. Be sure to note the relative position of the pump's fluid outlet to the air or hydraulic inlet of the motor. If the motor does not require servicing, leave it attached to its mounting.

⚠ CAUTION

Be sure to use *at least* two people when lifting, moving, or disconnecting the pump. This pump is too heavy for one person. If you are disconnecting the displacement pump from a motor which is still mounted (for example, on a wall bracket), *be sure* to support the displacement pump while it is being disconnected, to prevent it from falling and causing injury or property damage. Do this by securely bracing the pump, or by having at least two people hold it while another disconnects it.

4. Using adjustable wrenches, unscrew the coupling nut (103) from the connecting rod adapter (102). Remove the coupling collars (108). Take care not to lose or drop them. See Fig. 6.

5. Hold the tie rod flats with a wrench to keep the rods from turning. Unscrew the nuts (106) from the tie rods (107). Carefully remove the displacement pump (105) from the motor (101).

6. Refer to page 20 for displacement pump service. To service the air or hydraulic motor, refer to the separate motor manual, supplied.

Reconnecting the Displacement Pump

⚠ WARNING

To reduce the risk of pinching or injuring hands or fingers caught between the hydraulic motor drip pan and the coupling nut, *always* use connecting rod adapter 184595 and tie rods 184596 on Model 222892 Viscount Pump. *Never* use connecting rod adapter 184451 and tie rods 184452 on Model 222892; those parts do not allow sufficient clearance between the drip pan and coupling nut.

NOTE: On Premier models, ensure that the rod adapter (102) has not loosened during maintenance. Proper torque is necessary to prevent the rod adapter from loosening during the pump operation.

If the rod adapter (102) has loosened during maintenance, remove the adapter and apply Loctite® 2760™ (or equivalent) to the rod adapter and air motor piston threads, and then torque as specified in Fig. 6.

1. Screw the connecting rod adapter (102) to the air motor shaft. Torque as specified in Fig. 6.

2. Screw the tie rods (107) into the air motor (101). Using a wrench on the tie rod flats, torque as specified.

3. Make sure the coupling nut (103) and the coupling collars (108) are in place on the displacement rod (1).

4. Use at least two people to hold the displacement pump while another reconnects it to the motor (see the **CAUTION** at left). Orient the pump's fluid outlet to the air or hydraulic inlet as was noted in step 3 under **Disconnecting the Displacement Pump.** Position the displacement pump (105) on the tie rods (107).

5. Screw the nuts (106) onto the tie rods (107) and torque as noted in Fig. 6.

6. Screw the coupling nut (103) onto the connecting rod adapter (102) loosely. Hold the connecting rod adapter flats with a wrench to keep it from turning. Use an adjustable wrench to tighten the coupling nut. Torque as noted in Fig. 6.

7. Torque the packing nut (3) to 135–169 N•m (100–125 ft-lb).

8. Reconnect all hoses. Reconnect the ground wire if it was disconnected. Fill the wet-cup (3) 1/3 full of Graco Throat Seal Liquid or compatible solvent.

9. Turn on the air or hydraulic power supply. On hydraulic pumps, open the hydraulic return line valve *first*, then the supply line valve. Run the pump slowly to ensure that it operates properly.

King, Bulldog, and Viscount Pumps (Model 222837 Shown)

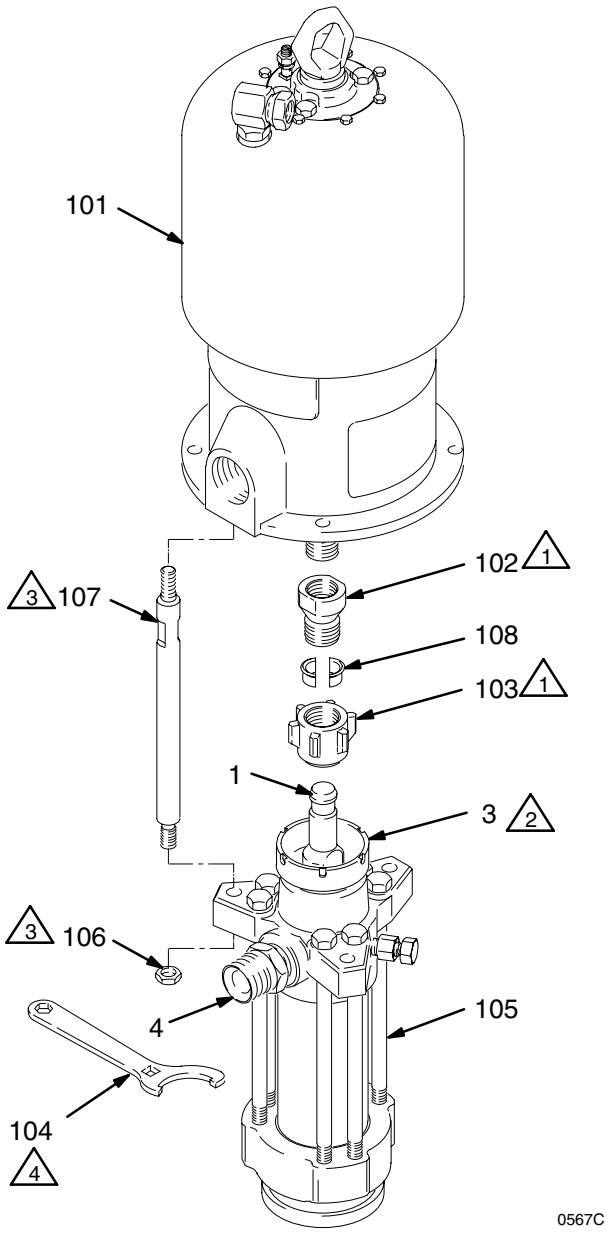

Premier Pumps (Model 237555 Shown)

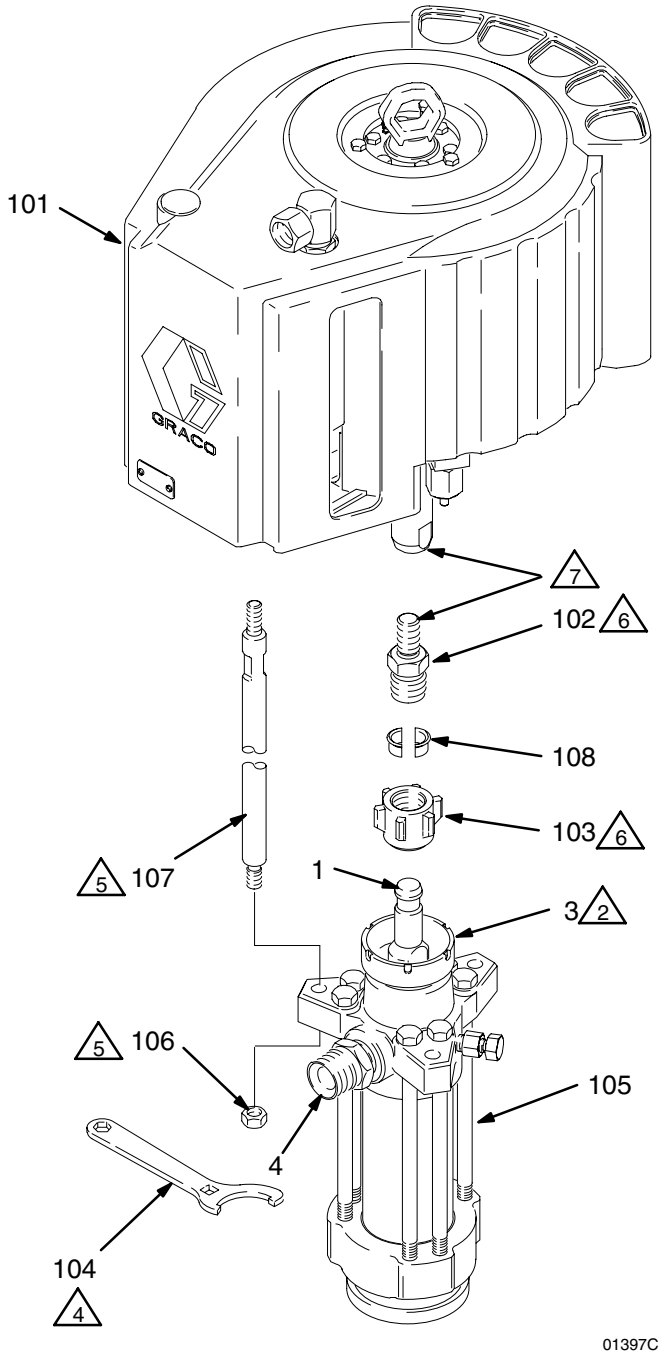

1 Torque to 196–210 N•m (145–155 ft-lb)

2 Torque to 135–169 N•m (100–125 ft-lb)

3 Torque to 129–142 N•m (95–105 ft-lb)

4 Square hole is for use with torque wrench.

5 Torque to 129–142 N•m (95–105 ft-lb)

6 Torque to 312–340 N•m (230–250 ft-lb)

7 Apply Loctite® 2760™ (or equivalent) to threads.

Fig. 6

Service

DISPLACEMENT PUMP SERVICE

Disassembly

When disassembling the pump, lay out all the removed parts in sequence, to ease reassembly. Clean all parts with a compatible solvent and inspect them for wear or damage. Refer to Fig. 7.

NOTE: Repair Kits are available to replace the throat (T) and piston (P) packings, and to replace the o-rings and cylinder seals. For the best results, use all the new parts in the kit. Kit parts are marked with an asterisk, for example (11*). These kits can also be used to convert the pump to different packing materials. Refer to pages 29 and 30.

1. Stand the displacement pump upright in a large vise. Loosen, but do not remove, the packing nut (3). Remove the six long cap screws (20), using a socket wrench.

2. Lift the outlet housing (19) straight up off the pump. Be careful not to scratch the displacement rod (1) while removing the housing.

3. Lift the cylinder (7), displacement rod (1), and piston assembly off the intake housing (17).

4. Remove the seal (6), ball guide (14), intake ball (16), intake seat housing (15), and o-ring (27) from the intake housing (17). Inspect the ball (16) and the ball seat (A) on the housing (15) for wear or damage.

5. Remove the seal (6) from the bottom of the outlet housing (19). Unscrew the packing nut (3). Remove the glands and v-packings (T) from the housing. **Do not** remove the outlet fitting (4) and o-ring (5) unless they need replacement.

6. Unscrew the handle of the bleeder valve plug (35) completely from the valve body (34). Clean the valve threads and the bleed hole. It is not necessary to remove the valve housing from the pump outlet housing (19).

7. Stand the cylinder (7) upright on a wooden block. Using a rubber mallet or an arbor press, drive the displacement rod (1) and piston assembly down into the cylinder as far as possible, then place the cylinder on its side and continue to drive the rod out the bottom until the piston comes free. Pull the rod and piston from the cylinder, being careful not to scratch the rod or cylinder.

⚠ CAUTION

To reduce the possibility of costly damage to the rod (1) and cylinder (7), *always* use a rubber mallet or an arbor press to drive the rod out of the cylinder. Be sure to place the cylinder on a soft block of wood. *Never* use a hammer to drive the rod.

NOTE: Service Tool 109507 is available as an accessory. The tool fits over the top of the displacement rod (1), making it easier to apply a 24 inch adjustable wrench or 3/4 in. drive socket when disconnecting the rod from the piston assembly.

8. Put the flats of the piston seat housing (12) in a vise. Unscrew the rod (1) from the housing (12), leaving the ball guide (9) assembled to the rod. Be careful to catch the piston ball (10) as you separate the housing (12) and ball guide (9), so that it doesn't fall and suffer damage.

9. Remove the glands and v-packings (P) from the piston seat housing (12). Inspect the ball (10) and ball seat (B) on the housing (12) for wear or damage.

10. Inspect the outer surface of the displacement rod (1) and the inner surface of the cylinder (7) for scoring or wear; replace either part if necessary. If the rod is being replaced, remove the ball guide (9) as explained in step 11.

NOTE: Do not remove the ball guide (9) from the displacement rod (1) unless either part is damaged.

11. Place the flats of the ball guide (9) in a vise. Using a 24 in. adjustable wrench or 3/4 in. drive socket, unscrew the rod (1) from the ball guide.

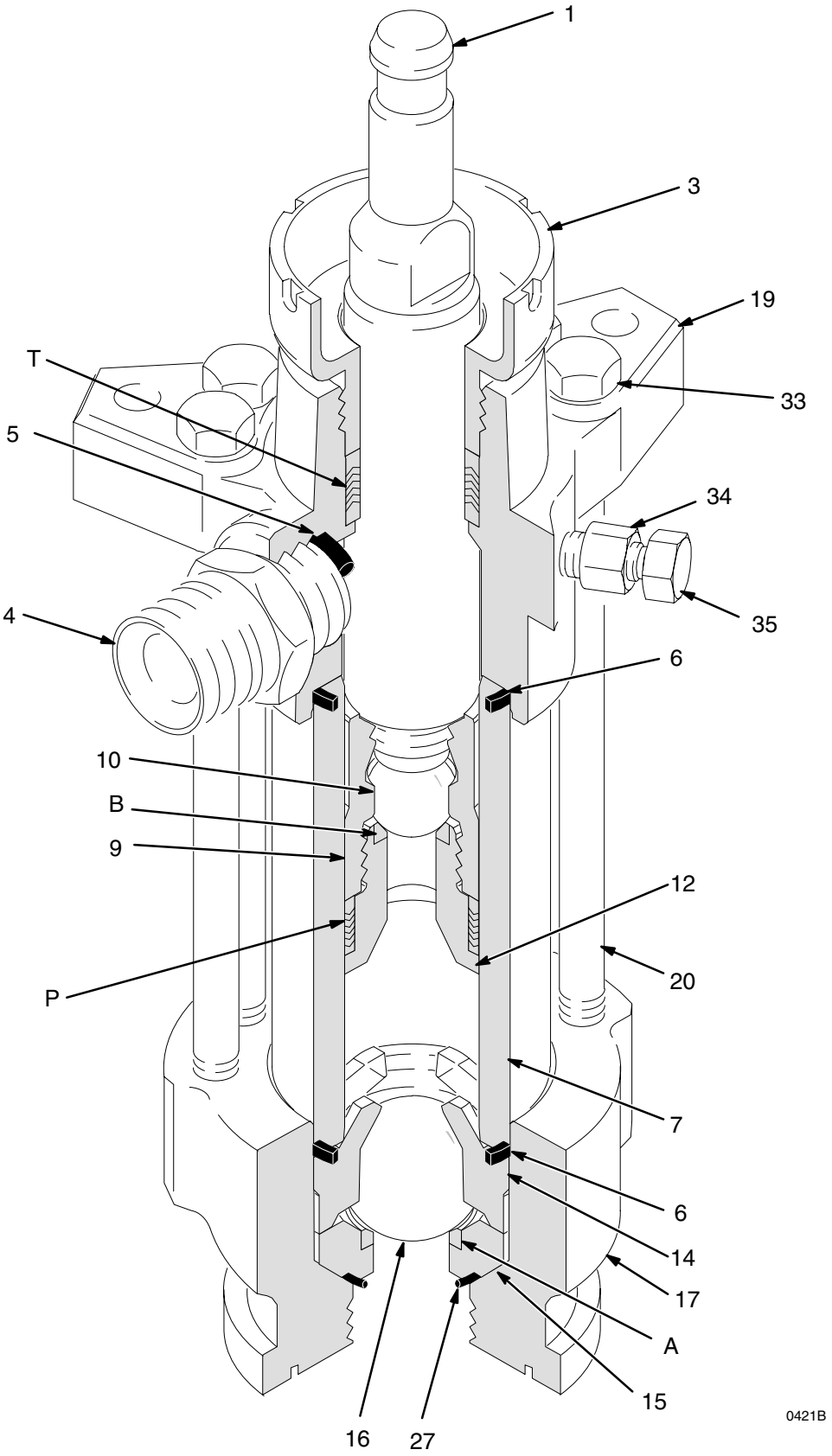

Fig. 7

Reassembly

1. *If it was necessary to remove the ball guide (9) from the displacement rod (1),* place the flats of the rod in a vise. Apply anti-seize lubricant 222955 to the threads and mating faces of the rod and the ball guide. Screw the ball guide onto the rod, hand tight. Remove from the vise. See Fig. 8.

2. Place the female gland (33*) on the piston seat housing (12). Install the five v-packings (P) one at a time ***with the lips facing up.*** Refer to page 29 for the correct packing order for your pump. Install the male gland (11*).

NOTE: To convert the pump to a different packing material, see pages 29 and 30.

NOTE: Service Tool 109507 is available as an accessory. The tool fits over the top of the displacement rod (1), making it easier to apply a 24 inch adjustable wrench or 3/4 in. drive socket when connecting the rod to the piston assembly.

3. Apply anti-seize lubricant 222955 to the threads and mating faces of the ball guide (9) and piston seat housing (12). Place the flats of the piston seat housing in a vise. Place the ball (10) on the piston seat. Screw the assembled rod (1) and ball guide (9) onto the piston assembly hand tight, then torque to 459–481 N•m (338–354 ft-lb).

4. Use an arbor press to reinstall the rod (1) into the cylinder (7), as follows. (The cylinder is symmetrical, so either end may face up.) Lubricate the piston packings (P). With the piston end facing down, lower the rod into the cylinder. Start the piston into the cylinder as much as possible, then drive the rod and piston the rest of the way into the cylinder with the arbor press.

⚠ CAUTION

To reduce the possibility of costly damage to the rod (1) and cylinder (7), *always* use a rubber mallet or an arbor press to drive the rod out of the cylinder. Be sure to place the cylinder on a soft block of wood. *Never* use a hammer to drive the rod.

5. Lubricate the o-ring (27*) and seal (6*). Install the o-ring on the intake seat housing (15). Install the intake seat housing (15), intake ball (16), ball guide (14), and seal (6*) in the intake housing (17). Set the intake housing all the way into the vise.

6. Place the cylinder (7) on the intake housing (17). Tap on the top of the displacement rod (1) with a rubber mallet, to seat the cylinder.

7. Lubricate the throat packings (T). Place the male gland (29*) into the outlet housing (19). Install the five v-packings one at a time ***with the lips facing down.*** Refer to page 29 for the correct packing order for your pump. Install the female gland (25*).

NOTE: To convert the pump to a different packing material, see pages 29 and 30.

8. Lubricate the threads of the packing nut (3), and loosely install it in the outlet housing (19).

9. Lubricate the seal (6*) and install it in the bottom of the outlet housing (19). Set the outlet housing on top of the cylinder (7). Apply thread lubricant to the six long cap screws (20). Install the cap screws through the outlet housing (19) and thread them loosely by hand into the intake housing (17). Tighten the cap screws oppositely and evenly, using a socket wrench, then torque to 244–264 N•m (180–195 ft-lb).

10. Screw the handle of the bleeder valve plug (35). The plug has two sets of threads. Be sure to screw the handle fully into the valve body (34). Torque the plug to 30–38 N•m (22–28 ft-lb).

NOTE: It is not ordinarily necessary to remove the outlet fitting (4) and o-ring (5*). However, if they were replaced because of damage, lubricate the o-ring and place it on the fitting. Screw the fitting into the outlet housing (19). Torque to 156–171 N•m (115–126 ft-lb).

11. Reconnect the displacement pump to the air motor as explained on page 18.

1 Torque to 156–171 N•m (115–126 ft-lb).

2 Torque to 135–169 N•m (100–125 ft-lb).

3 Torque to 459–481 N•m (338–354 ft-lb).

4 Torque oppositely and evenly to 244–264 N•m (180–195 ft-lb).

5 Apply anti-seize lubricant to threads and mating faces.

6 Lubricate.

7 Apply thread lubricant.

8 Use arbor press to drive into cylinder (7).

9 Unscrew plug from valve housing and clean.

10 Torque to 30–38 N•m (22–28 ft-lb).

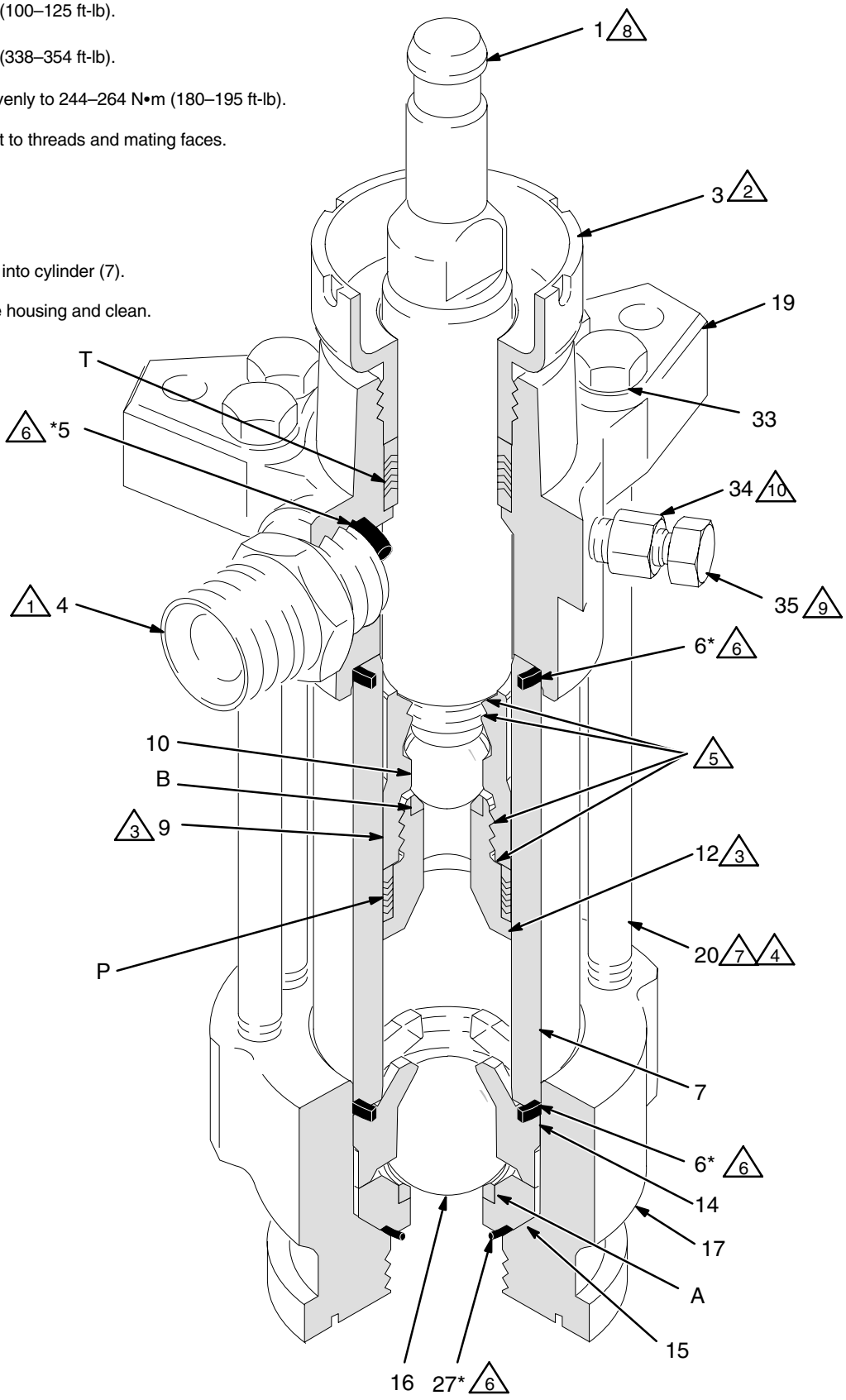

042

Fig. 8

Parts

Part No. 222837 Pump, Series A 28:1 Ratio, with King Air Motor

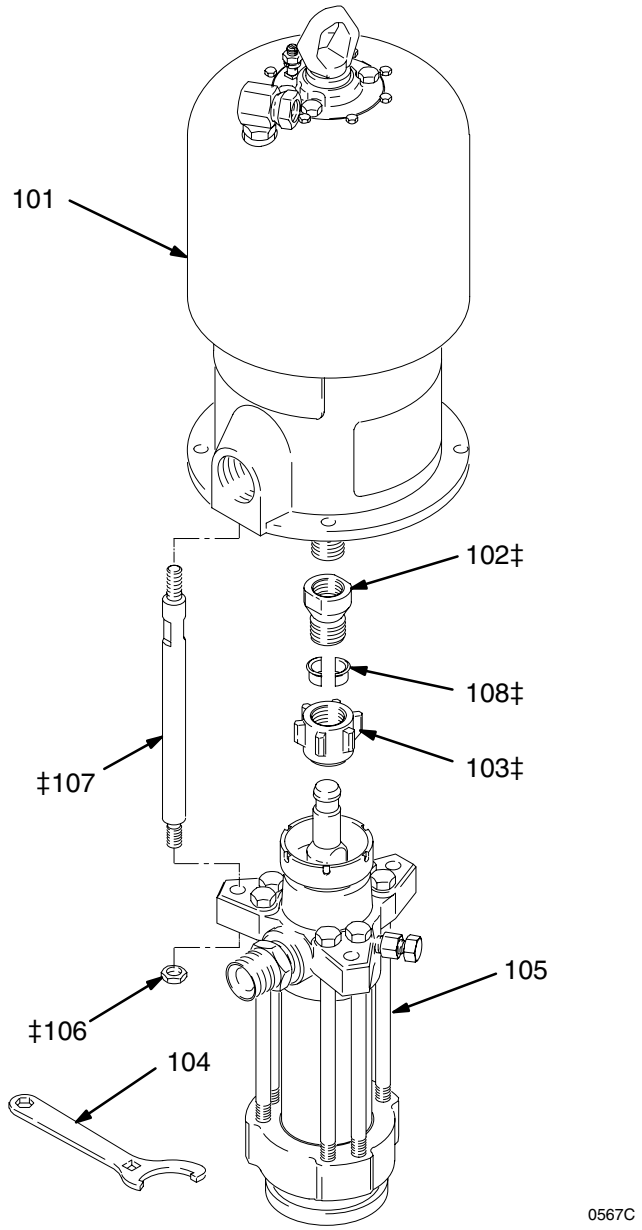

Ref. No.	Part No.	Description	Qty.
101	245111	AIR MOTOR, King See 309347 for parts	1
102‡	184451	ADAPTER, connecting rod	1
103‡	184096	NUT, coupling	1
104	184278	WRENCH, packing nut	1
105	222796	PUMP, displacement See pages 28 & 29 for parts	1
106‡	106166	NUT, hex; M16 x 2.0	3
107‡	184452	ROD, tie; 265 mm (10.43 in.) shoulder to shoulder	3
108‡	184130	COLLAR, coupling	2

‡ *These parts are included in Connection Kit 235414, which may be purchased separately.*

Parts

Part No. 222891 Pump, Series B
28:1 Ratio, with Quiet King Air Motor

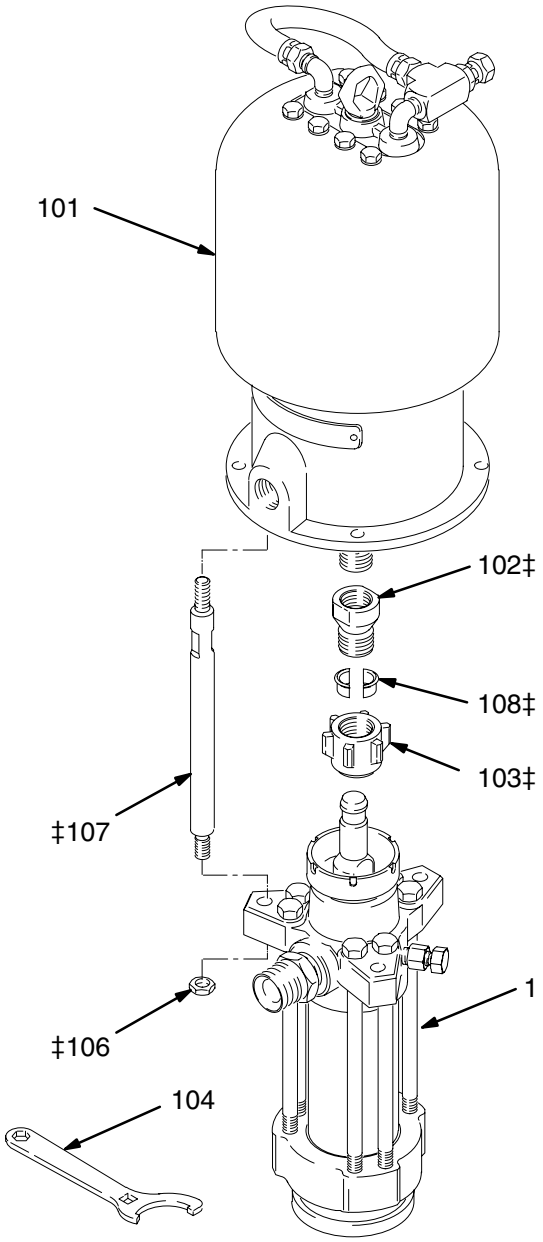

Ref. No.	Part No.	Description	Qty.
101	220106	AIR MOTOR, King, quiet See 309348 for parts	1
102‡	184451	ADAPTER, connecting rod	1
103‡	184096	NUT, coupling	1
104	184278	WRENCH, packing nut	1
105	222796	PUMP, displacement See pages 28 & 29 for parts	1
106‡	106166	NUT, hex; M16 x 2.0	3
107‡	184452	ROD, tie; 265 mm (10.43 in.) shoulder to shoulder	3
108‡	184130	COLLAR, coupling	2

‡ *These parts are included in Connection Kit 235414, which may be purchased separately.*

Parts

Part No. 237555 Pump, Series B 45:1 Ratio, with Premier Air Motor

Part No. 241490 Pump, Series A 45:1 Ratio, with Premier Air Motor

Part No. 233127* Pump, Series A 45:1 Ratio, with Premier Air Motor

Part No. 233128* Pump, Series A 45:1 Ratio, with Premier Air Motor

Ref. No.	Part No.	Description	Qty.
101	222800	AIR MOTOR, Premier See 308213 for parts	1
102‡	184582	ADAPTER, connecting rod (For Models other than 241490)	1
	617463	ADAPTER, connecting rod (For Model 241490 only)	1
103‡	184096	NUT, coupling	1
104	184278	WRENCH, packing nut	1
105	222796	PUMP, displacement See pages 28 & 29 for parts	1
106‡	106166	NUT, hex; M16 x 2.0	3
107‡	184382	ROD, tie; 380 mm (14.96 in.) shoulder to shoulder (For Models other than 241490)	3
	617464	ROD, tie; 265 mm (10.43 in.) shoulder to shoulder (For Model 241490 only	3
108‡	184130	COLLAR, coupling	2

‡ *These parts are included in Connection Kit 235419, which may be purchased separately.*

* Models 233127 and 233128 contain the same parts as Model 237555, but are oriented differently.

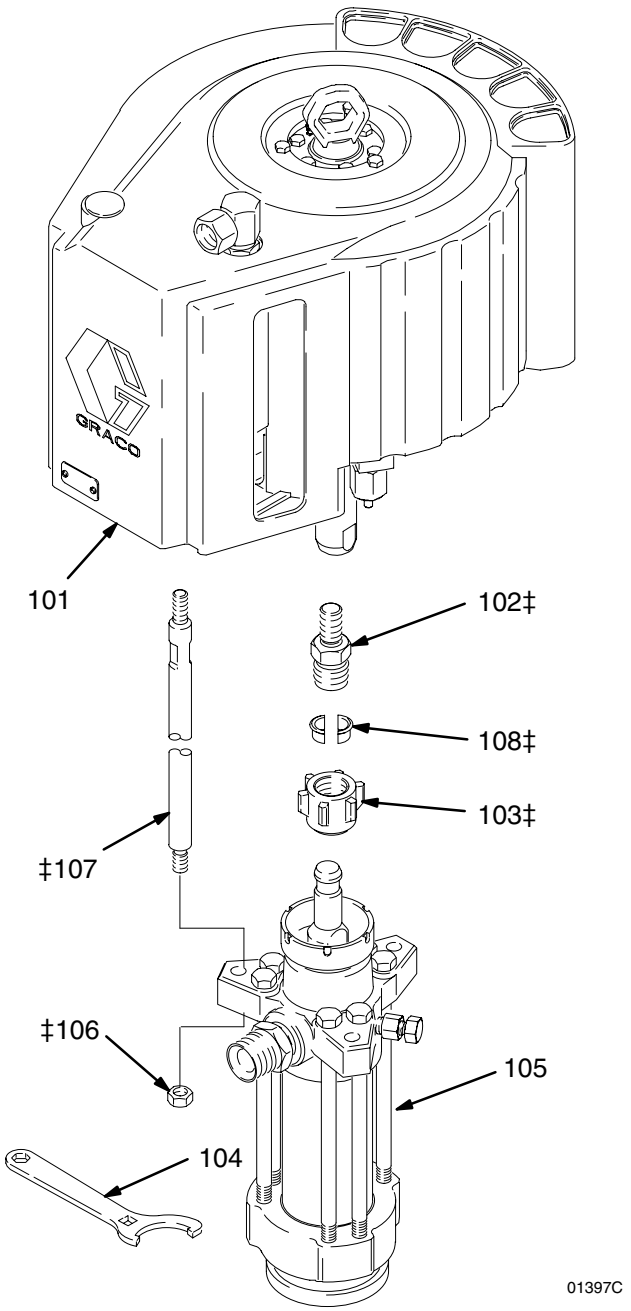

Parts

Part No. 222892 Pump, Series B with Viscount Hydraulic Motor

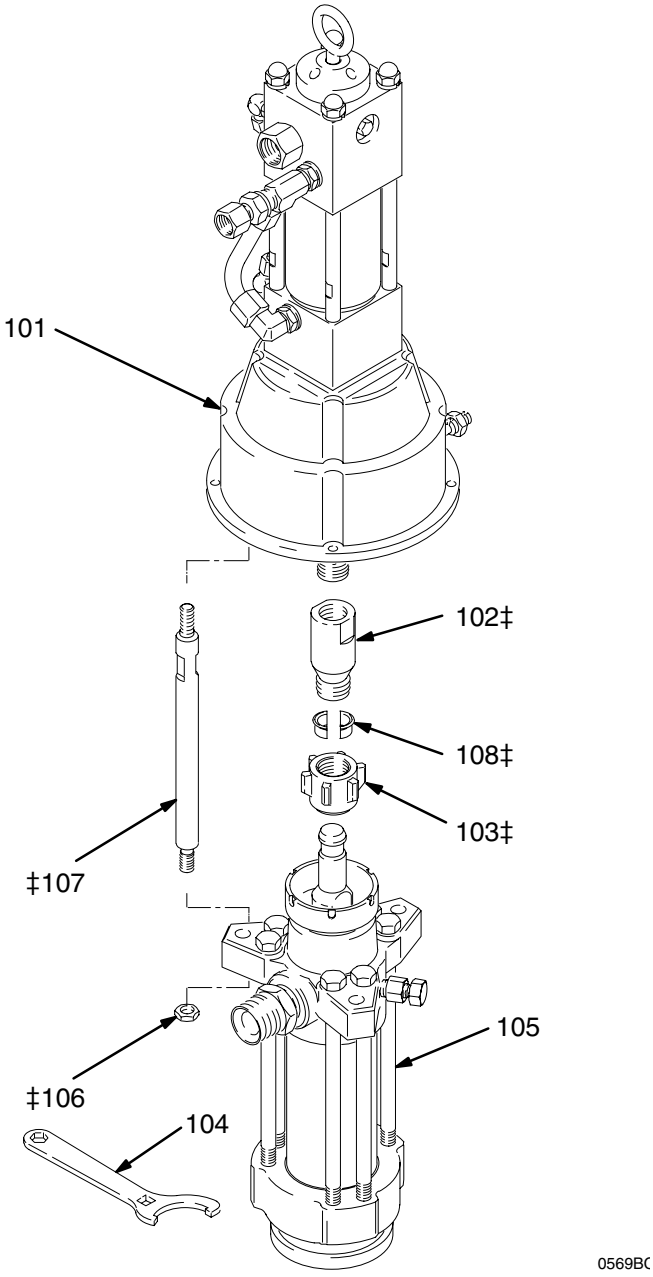

Ref. No.	Part No.	Description	Qty.
101	235345	HYDRAULIC MOTOR, Viscount See 307158 for parts	1
102‡	184595	ADAPTER, connecting rod	1
103‡	184096	NUT, coupling	1
104	184278	WRENCH, packing nut	1
105	222796	PUMP, displacement See pages 28 & 29 for parts	1
106‡	106166	NUT, hex; M16 x 2.0	3
107‡	184596	ROD, tie; 315 mm (12.40 in.) shoulder to shoulder	3
108‡	184130	COLLAR, coupling	2

‡ *These parts are included in Connection Kit 222976, which may be purchased separately.*

Parts

NOTE: The parts listed on this page are common to all displacement pumps covered in this manual. The pumps use different packing configurations. Standard Model 222805 uses stainless steel cap screws with washers. Optional pumps use carbon steel cap screws without a washer. Refer to pages 29 and 30 for the different pump configurations available.

* *These parts are included in Packing Repair Kit 222845, which may be purchased separately for standard Displacement Pump 222805. They are also included in the optional packing conversion kits listed on pages 29 and 30.*

✓ *Keep these spare parts on hand to reduce down time.*

Ref No.	Part No.	Description	Qty
1	184276	ROD, displacement; stainless steel	1
3	184380	PACKING NUT/WET-CUP; carbon steel	1
4	184279	FITTING, outlet; 1–1/2 in. npt(m) x M42 x 20	1
5*	109213	O-RING; PTFE	1
6*	184072	SEAL; Acetal	2
7	184461	CYLINDER; stainless steel	1
9	184283	GUIDE, ball, piston; stainless steel	1
10✓	102973	BALL, piston; stainless steel; 1.25 in. (31.8 mm) dia.	1
12	222795	HOUSING, seat, piston valve; stainless steel w/tungsten carbide seat	1
14	184406	GUIDE, ball, intake; ductile iron	1
15	222794	HOUSING, seat, intake valve; ductile iron w/tungsten carbide seat	1
16✓	110294	BALL, intake; stainless steel; 2 in. (50.8 mm) dia.	1
17	184275	HOUSING, intake; ductile iron	1
19	222918	HOUSING, outlet; nickel-plated ductile iron	1
20	109203	SCREW, cap, hex hd; 5/8–11 unc-2A x 12 in. (305 mm)	6
27*	102857	O-RING; PTFE	1
34	184392	HOUSING, valve, bleeder; 3/8–18 npt x 1/2–20 unf-2b	1
35	190293	PLUG, valve; 1/2–20 unf-2a	1

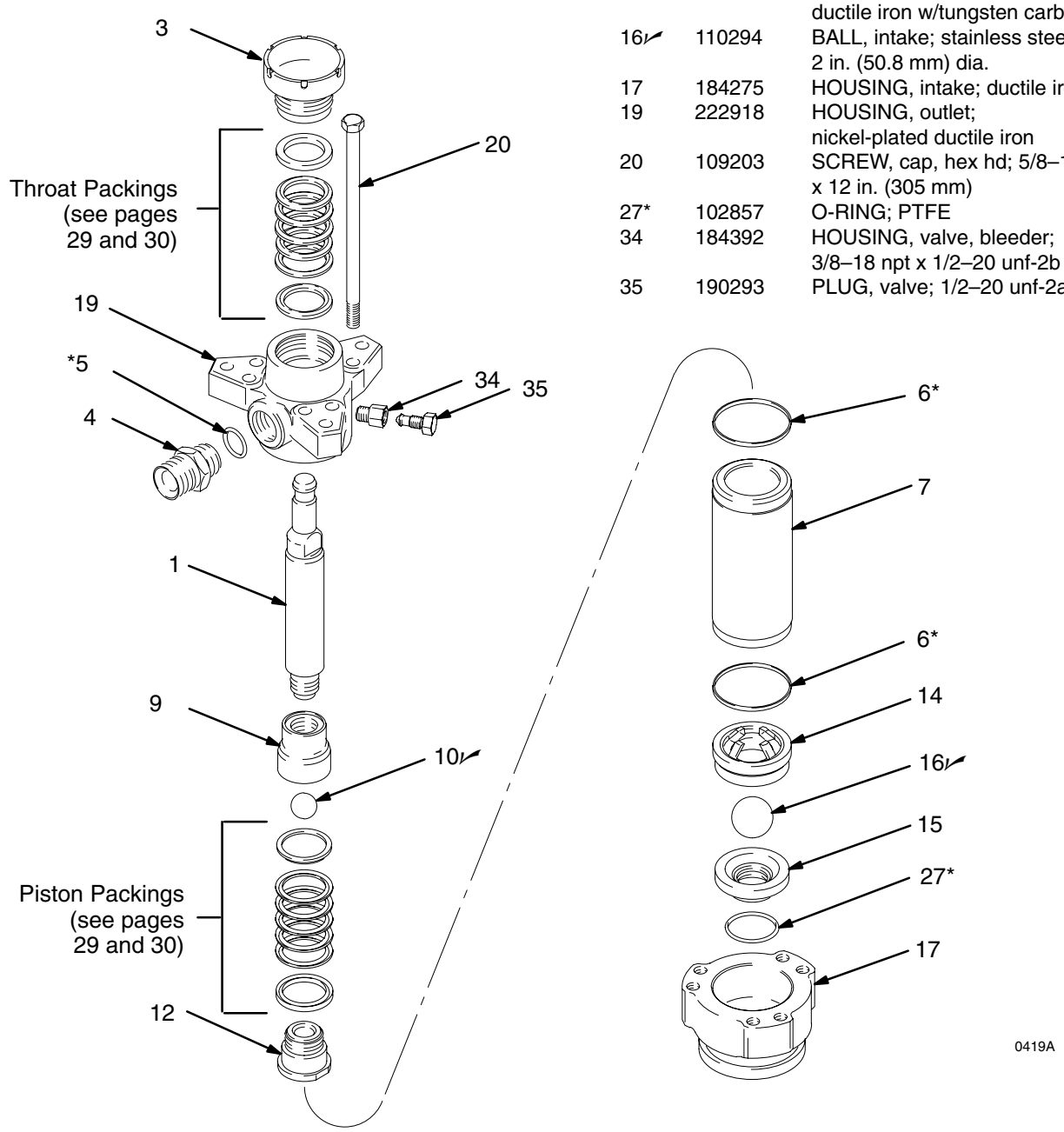

Parts

Standard Displacement Pump

Displacement Pump 222796, Series A (PTFE and Leather Packings)

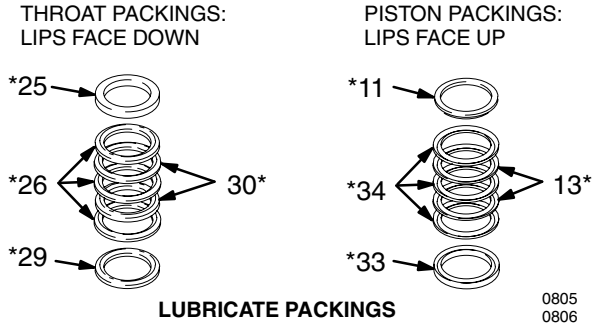

Ref No.	Part No.	Description	Qty
11*	184232	GLAND, male; piston; stainless steel	1
13*	184312	V-PACKING; piston; leather	2
25*	184181	GLAND, female; throat; stainless steel	1
26*	109311	V-PACKING; throat; PTFE	3
29*	184231	GLAND, male; throat; stainless steel	1
30*	184311	V-PACKING; throat; leather	2
33*	184182	GLAND, female; piston; stainless steel	1
34*	109312	V-PACKING; piston; PTFE	3

* *These parts are included in Packing Repair Kit 222849, which may be purchased separately. For packing conversion kits, see below and page 30.*

Optional Displacement Pumps

Displacement Pump 222987, Series A, (Leather Packings with PTFE Backup)

Wetted Parts: Carbon Steel; Chrome, Zinc, and Electroless Nickel Plating; 304, 440 and 17–4 PH Grades of Stainless Steel; Tungsten Carbide; Ductile Iron; Acetal; PTFE; Leather

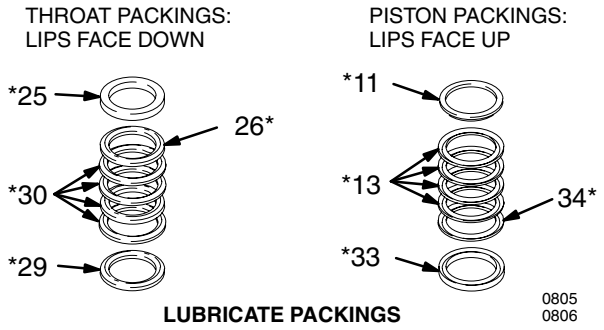

Ref No.	Part No.	Description	Qty
11*	184232	GLAND, male; piston; stainless steel	1
13*	184312	V-PACKING; piston; leather	4
25*	184181	GLAND, female; throat; stainless steel	1
26*	109311	V-PACKING; throat; PTFE	1
29*	184231	GLAND, male; throat; stainless steel	1
30*	184311	V-PACKING; throat; leather	4
33*	184182	GLAND, female; piston; stainless steel	1
34*	109312	V-PACKING; piston; PTFE	1

* *These parts are included in Packing Repair Kit 222847, which may be purchased separately. This kit can also be used to convert a pump to Leather packings with a PTFE backup.*

Displacement Pump 222988, Series A, (PTFE Packings)

Wetted Parts: Carbon Steel; Chrome, Zinc, and Electroless Nickel Plating; 304, 440 and 17–4 PH Grades of Stainless Steel; Tungsten Carbide; Ductile Iron; Acetal; PTFE

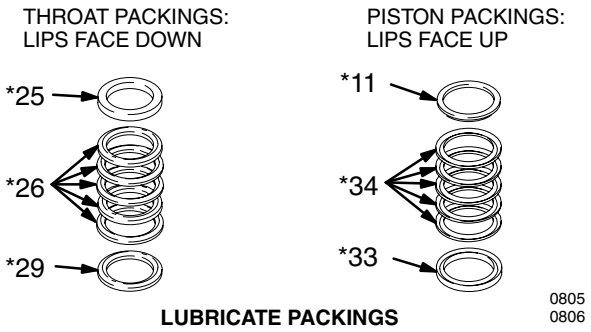

Ref No.	Part No.	Description	Qty
11*	184232	GLAND, male; piston; stainless steel	1
25*	184181	GLAND, female; throat; stainless steel	1
26*	109311	V-PACKING; throat; PTFE	5
29*	184231	GLAND, male; throat; stainless steel	1
33*	184182	GLAND, female; piston; stainless steel	1
34*	109312	V-PACKING; piston; PTFE	5

* *These parts are included in Packing Repair Kit 222846, which may be purchased separately. This kit can also be used to convert a pump to PTFE packings.*

Packing Conversion Kits

Packing Conversion Kit 222845, (UHMWPE and PTFE Packings)

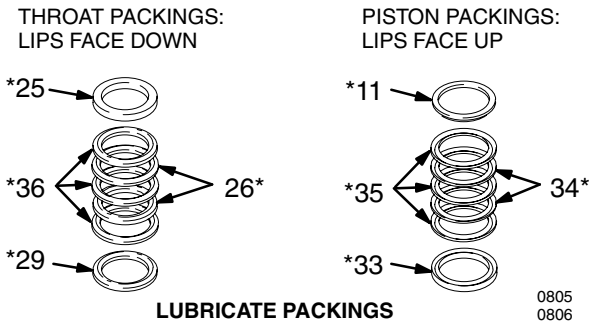

Ref No.	Part No.	Description	Qty
11*	184232	GLAND, male; piston; stainless steel	1
25*	184181	GLAND, female; throat; stainless steel	1
26*	109311	V-PACKING; throat; PTFE	2
29*	184231	GLAND, male; throat; stainless steel	1
33*	184182	GLAND, female; piston; stainless steel	1
34*	109312	V-PACKING; piston; PTFE	2
35*	109262	V-PACKING; piston; UHMWPE	3
36*	109261	V-PACKING; throat; UHMWPE	3

Packing Conversion Kit 222848, (UHMWPE and Leather Packings)

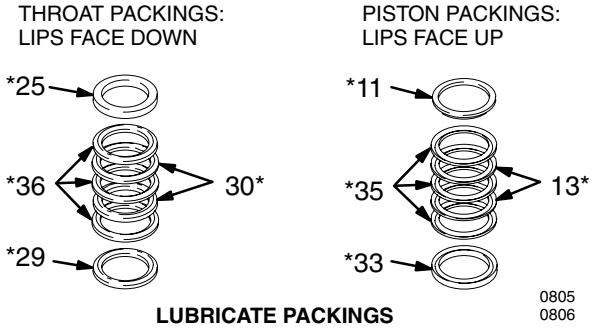

Ref No.	Part No.	Description	Qty
11*	184232	GLAND, male; piston; stainless steel	1
13*	184312	V-PACKING; piston; leather	2
25*	184181	GLAND, female; throat; stainless steel	1
29*	184231	GLAND, male; throat; stainless steel	1
30*	184311	V-PACKING; throat; leather	2
33*	184182	GLAND, female; piston; stainless steel	1
35*	109262	V-PACKING; piston; UHMWPE	3
36*	109261	V-PACKING; throat; UHMWPE	3

Notes

Technical Data

Sound Level Data*

Pump Model	Air Pressure	Cycle Rate	Sound Pressure Level	Sound Power level
222837	90 psi	25 cycles/min	98 dB(A)	113 dB(A)
222891	90 psi	25 cycles/min	86.2 dB(A)	101 dB(A)
237555	77 psi	25 cycles/min	88 dB(A)	103 dB(A)
233127	77 psi	25 cycles/min	88 dB(A)	103 dB(A)
233128	77 psi	25 cycles/min	88 dB(A)	103 dB(A)
222892	1450 psi	25 cycles/min	88 dB(A)	103 dB(A)

* Tested in accordance with ISO 3744.

Technical Data

(MODELS 222837 AND 222891 KING PUMPS)

⚠ WARNING

Be sure that all fluids and solvents used are chemically compatible with the Wetted Parts listed below. Always read the manufacturer's literature before using fluid or solvent in this pump.

Ratio	28:1
Maximum fluid working pressure	19.3 MPa, 193 bar (2800 psi)
Maximum air input pressure	0.7 MPa, 7 bar (100 psi)
Pump cycles per 3.8 liters (1 gal.)	9
Recommended pump speed for continuous operation	50 cycles per min
Maximum flow	21.8 liters/min (5.8 gpm) at 50 cycles/min
Air motor piston effective area	506 cm^2 (78.5 $in.^2$)
Stroke length	120 mm (4.75 in.)
Displacement pump effective area	18 cm^2 (2.79 $in.^2$)
Maximum pump operating temperature	65.5°C (150°F)
Air inlet size	3/4 npsm(f)
Fluid inlet size	2 in. npt(f)
Fluid outlet size	1–1/2 in. npt(m)
Weight	approx. 69 kg (152 lb)
Wetted parts	Carbon Steel; Chrome, Zinc, and Electroless Nickel Plating; 304, 440 and 17–4 PH Grades of Stainless Steel; Tungsten Carbide; Ductile Iron; Acetal; PTFE; Leather

KEY: Fluid Outlet Pressure - Black Curves
Air Consumption - Gray Curves

A 0.63 MPa, 6.3 bar (90 psi) Air Pressure
B 0.49 MPa, 4.9 bar (70 psi) Air Pressure
C 0.28 MPa, 2.8 bar (40 psi) Air Pressure

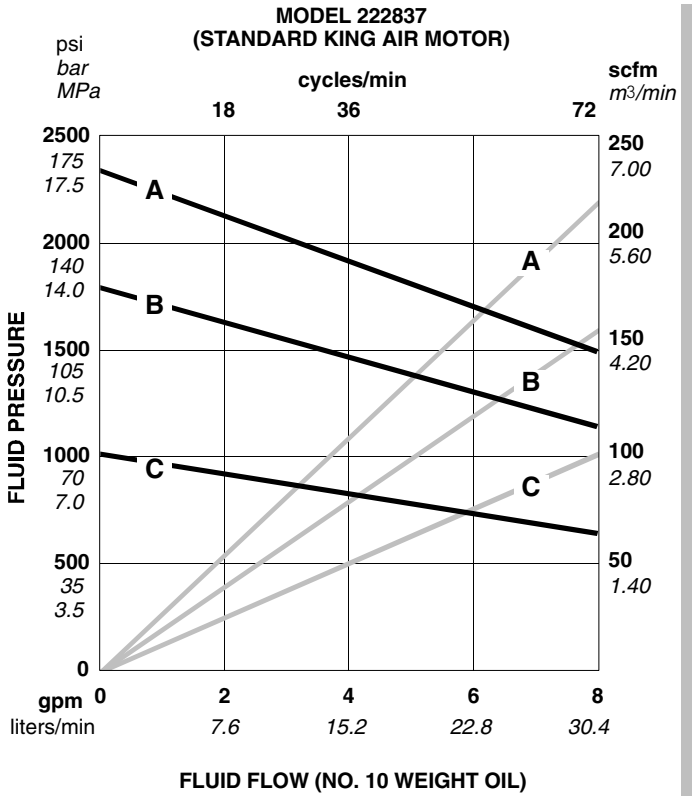

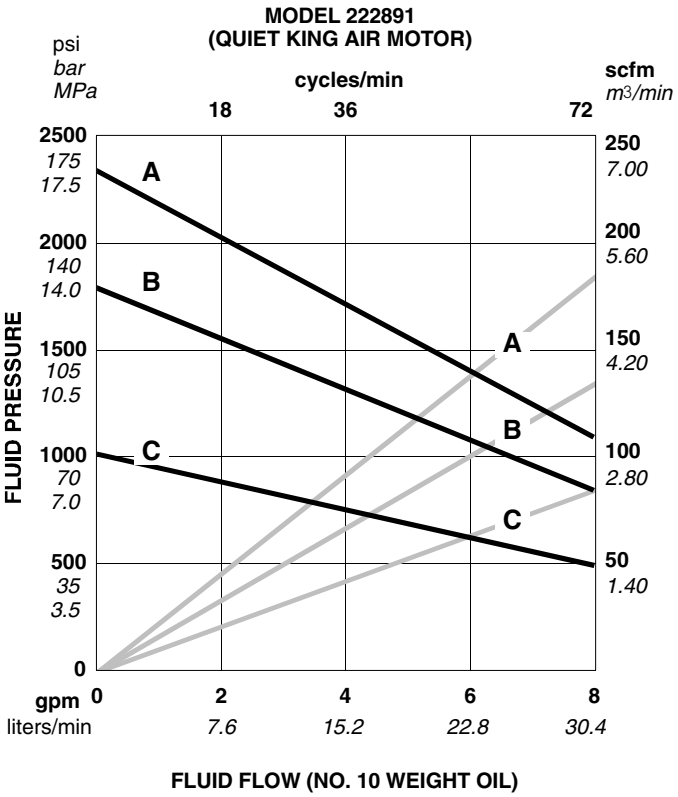

To find Fluid Outlet Pressure (MPa/bar/psi) at a specific fluid flow (lpm/gpm) and operating air pressure (MPa/bar/psi):

1. Locate desired flow along bottom of chart.
2. Follow vertical line up to intersection with selected fluid outlet pressure curve (black). Follow left to scale to read fluid outlet pressure.

To find Pump Air Consumption (m^3/min or scfm) at a specific fluid flow (lpm/gpm) and air pressure (MPa/bar/psi):

1. Locate desired flow along bottom of chart.
2. Read vertical line up to intersection with selected air consumption curve (gray). Follow right to scale to read air consumption.

Technical Data

(MODELS 237555, 233127, and 233128 PREMIER PUMP)

⚠ WARNING

Be sure that all fluids and solvents used are chemically compatible with the Wetted Parts listed below. Always read the manufacturer's literature before using fluid or solvent in this pump.

Ratio	45:1
Maximum fluid working pressure	31 MPa, 310 bar (4500 psi)
Maximum air input pressure	7 bar (100 psi)
Pump cycles per 3.8 liters (1 gal.)	8.7
Recommended pump speed for continuous operation	60 cycles per min
Maximum flow	26.1 liters/min (6.9 gpm) at 60 cycles/min
Air motor piston effective area	800 cm^2 (124 $in.^2$)
Stroke length	120 mm (4.75 in.)
Displacement pump effective area	18 cm^2 (2.79 $in.^2$)
Maximum pump operating temperature	65.5°C (150°F)
Air inlet size	3/4 npsm(f)
Fluid inlet size	2 in. npt(f)
Fluid outlet size	1–1/2 in. npt(m)
Weight	approx. 109 kg (240 lb)
Wetted parts	Carbon Steel; Chrome, Zinc, and Electroless Nickel Plating; 304, 440 and 17–4 PH Grades of Stainless Steel; Tungsten Carbide; Ductile Iron; Acetal; PTFE; Leather

KEY: Fluid Outlet Pressure - Black Curves
Air Consumption - Gray Curves

A 0.7 MPa, 7 bar (100 psi) Air Pressure
B 0.49 MPa, 4.9 bar (70 psi) Air Pressure
C 0.28 MPa, 2.8 bar (40 psi) Air Pressure

PREMIER AIR MOTOR

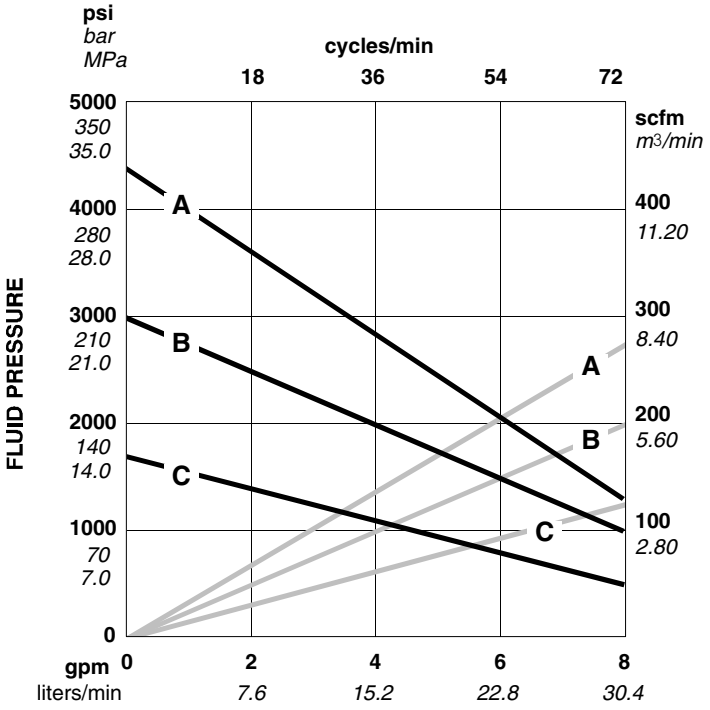

FLUID FLOW (NO. 10 WEIGHT OIL)

To find Fluid Outlet Pressure (MPa/bar/psi) at a specific fluid flow (lpm/gpm) and operating air pressure (MPa/bar/psi):

1. Locate desired flow along bottom of chart.
2. Follow vertical line up to intersection with selected fluid outlet pressure curve (black). Follow left to scale to read fluid outlet pressure.

To find Pump Air Consumption (m^3/min or scfm) at a specific fluid flow (lpm/gpm) and air pressure (MPa/bar/psi):

1. Locate desired flow along bottom of chart.
2. Read vertical line up to intersection with selected air consumption curve (gray). Follow right to scale to read air consumption.

Technical Data

(MODEL 222892 VISCOUNT PUMP)

⚠ WARNING

Be sure that all fluids and solvents used are chemically compatible with the Wetted Parts listed below. Always read the manufacturer's literature before using fluid or solvent in this pump.

Maximum fluid working pressure	182 MPa, 182 bar (2600 psi)
Maximum hydraulic oil input pressure	10.5 MPa, 105 bar (1500 psi)
Pump cycles per 3.8 liters (1 gal.)	9
Recommended pump speed for continuous operation	60 cycles per min
Maximum flow	26.1 liters/min (6.9 gpm) at 60 cycles/min
Hydraulic motor piston effective area	31.6 cm^2 (4.9 $in.^2$)
Stroke length	120 mm (4.75 in.)
Displacement pump effective area	18 cm^2 (2.79 $in.^2$)
Maximum pump operating temperature	65.5°C (150°F)
Hydraulic oil inlet size	3/4 npt(f)
Fluid inlet size	2 in. npt(f)
Fluid outlet size	1-1/2 in. npt(m)
Weight	approx. 89 kg (196 lb)
Wetted parts	Carbon Steel; Chrome, Zinc, and Electroless Nickel Plating; 304, 440 and 17–4 PH Grades of Stainless Steel; Tungsten Carbide; Ductile Iron; Acetal; PTFE; Leather

KEY: Fluid Outlet Pressure - Black Curves
Hydraulic Oil Consumption - Gray Curves

A 10.5 MPa, 105 bar (1500 psi) Hydraulic Oil Pressure
B 7.4 MPa, 74 bar (1050 psi) Hydraulic Oil Pressure
C 4.2 MPa, 42 bar (600 psi) Hydraulic Oil Pressure

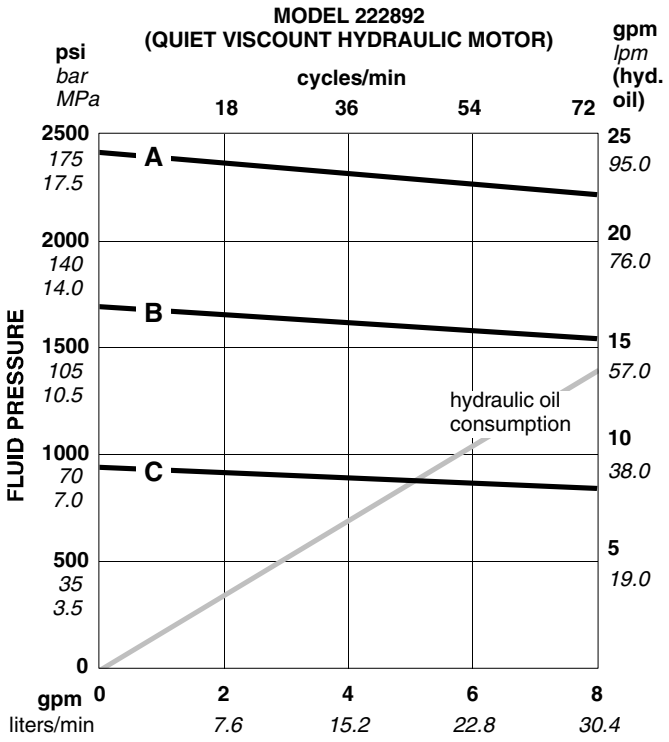

FLUID FLOW (NO. 10 WEIGHT OIL)

To find Fluid Outlet Pressure (MPa/bar/psi) at a specific fluid flow (lpm/gpm) and operating hydraulic oil pressure (MPa/bar/psi):

1. Locate desired flow along bottom of chart.
2. Follow vertical line up to intersection with selected fluid outlet pressure curve (black). Follow left to scale to read fluid outlet pressure.

To find Pump Hydraulic Oil Consumption (lpm or gpm) at a specific fluid flow (lpm/gpm) and hydraulic oil pressure (MPa/bar/psi):

1. Locate desired flow along bottom of chart.
2. Read vertical line up to intersection with oil consumption curve (gray). Follow right to scale to read oil consumption.

Dimensions

Model 222837 Shown

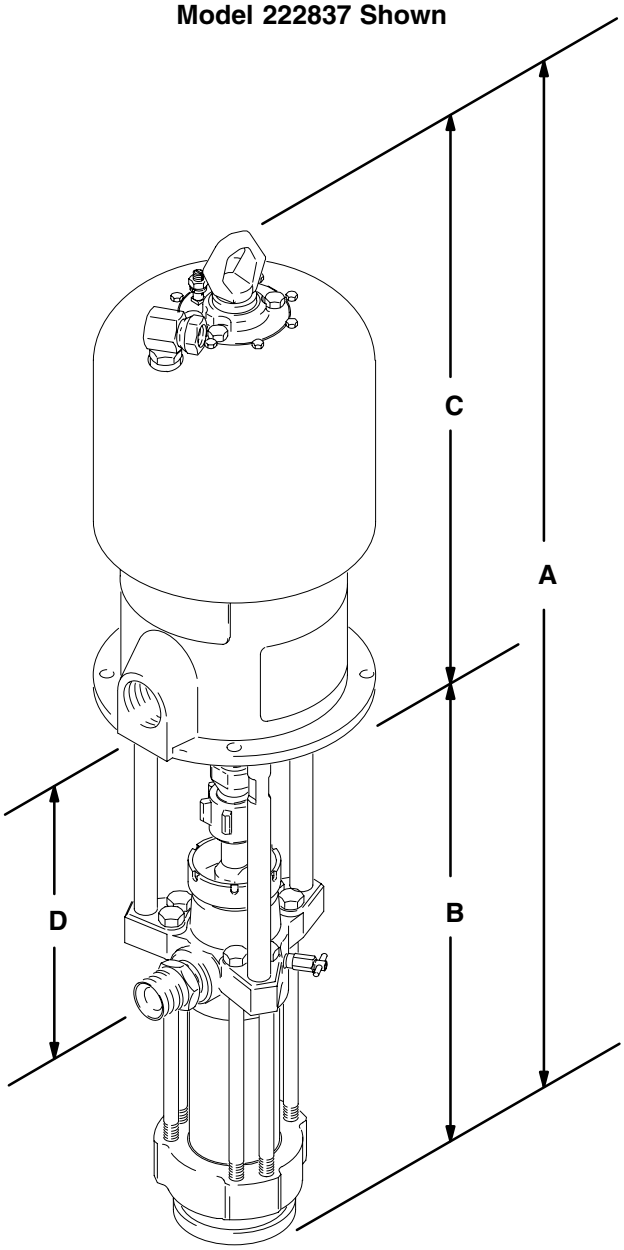

0566

Pump Model	A	B	C	D
222837	1225.6 mm (48.25 in.)	642.6 mm (25.3 in.)	583.0 mm (22.95 in.)	298.0 mm (11.73 in.)
222891	1235.1 mm (48.63 in.)	642.6 mm (25.3 in.)	592.5 mm (23.33 in.)	298.0 mm (11.73 in.)
237555	1160.0 mm (45.7 in.)	759.0 mm (29.9 in.)	401.0 mm (15.79 in.)	413.0 mm (16.3 in.)
233127	1160.0 mm (45.7 in.)	759.0 mm (29.9 in.)	401.0 mm (15.79 in.)	413.0 mm (16.3 in.)
233128	1160.0 mm (45.7 in.)	759.0 mm (29.9 in.)	401.0 mm (15.79 in.)	413.0 mm (16.3 in.)
222892	1264.8 mm (49.8 in.)	642.6 mm (25.3 in.)	622.2 mm (24.5 in.)	298.0 mm (11.73 in.)

Mounting Hole Layouts

King, Bulldog, and Viscount Pumps

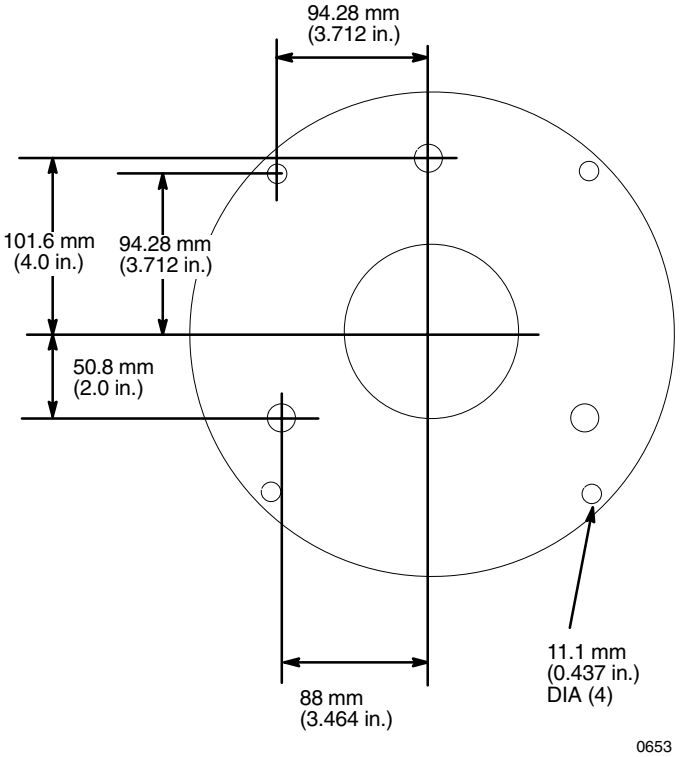

Premier Pumps

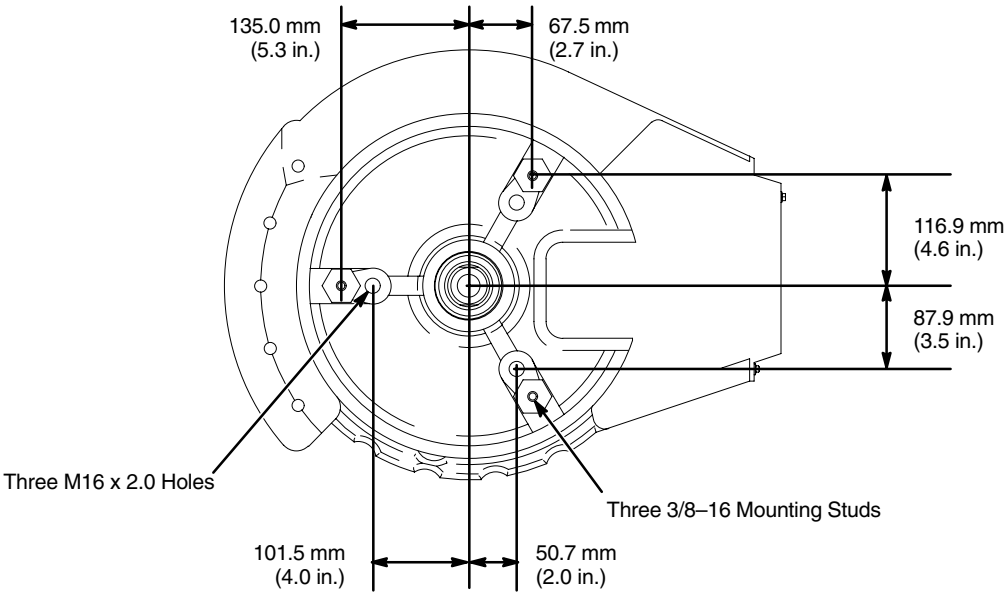

Graco Standard Warranty

Graco warrants all equipment manufactured by Graco and bearing its name to be free from defects in material and workmanship on the date of sale to the original purchaser for use. With the exception of any special, extended, or limited warranty published by Graco, Graco will, for a period of twelve months from the date of sale, repair or replace any part of the equipment determined by Graco to be defective. This warranty applies only when the equipment is installed, operated and maintained in accordance with Graco's written recommendations.

This warranty does not cover, and Graco shall not be liable for general wear and tear, or any malfunction, damage or wear caused by faulty installation, misapplication, abrasion, corrosion, inadequate or improper maintenance, negligence, accident, tampering, or substitution of non-Graco component parts. Nor shall Graco be liable for malfunction, damage or wear caused by the incompatibility of Graco equipment with structures, accessories, equipment or materials not supplied by Graco, or the improper design, manufacture, installation, operation or maintenance of structures, accessories, equipment or materials not supplied by Graco.

This warranty is conditioned upon the prepaid return of the equipment claimed to be defective to an authorized Graco distributor for verification of the claimed defect. If the claimed defect is verified, Graco will repair or replace free of charge any defective parts. The equipment will be returned to the original purchaser transportation prepaid. If inspection of the equipment does not disclose any defect in material or workmanship, repairs will be made at a reasonable charge, which charges may include the costs of parts, labor, and transportation.

THIS WARRANTY IS EXCLUSIVE, AND IS IN LIEU OF ANY OTHER WARRANTIES, EXPRESS OR IMPLIED, INCLUDING BUT NOT LIMITED TO WARRANTY OF MERCHANTABILITY OR WARRANTY OF FITNESS FOR A PARTICULAR PURPOSE.

Graco's sole obligation and buyer's sole remedy for any breach of warranty shall be as set forth above. The buyer agrees that no other remedy (including, but not limited to, incidental or consequential damages for lost profits, lost sales, injury to person or property, or any other incidental or consequential loss) shall be available. Any action for breach of warranty must be brought within two (2) years of the date of sale.

Graco makes no warranty, and disclaims all implied warranties of merchantability and fitness for a particular purpose in connection with accessories, equipment, materials or components sold but not manufactured by Graco. These items sold, but not manufactured by Graco (such as electric motors, switches, hose, etc.), are subject to the warranty, if any, of their manufacturer. Graco will provide purchaser with reasonable assistance in making any claim for breach of these warranties.

In no event will Graco be liable for indirect, incidental, special or consequential damages resulting from Graco supplying equipment hereunder, or the furnishing, performance, or use of any products or other goods sold hereto, whether due to a breach of contract, breach of warranty, the negligence of Graco, or otherwise.

FOR GRACO CANADA CUSTOMERS
The parties acknowledge that they have required that the present document, as well as all documents, notices and legal proceedings entered into, given or instituted pursuant hereto or relating directly or indirectly hereto, be drawn up in English. Les parties reconnaissent avoir convenu que la rédaction du présente document sera en Anglais, ainsi que tous documents, avis et procédures judiciaires exécutés, donnés ou intentés à la suite de ou en rapport, directement ou indirectement, avec les procedures concernées.

Graco Information

For the latest information about Graco products, visit www.graco.com.

TO PLACE AN ORDER, contact your Graco distributor or call to identify the distributor closest to you:
Phone: 612–623–6921 or **Toll Free:** 1–800–328–0211 **Fax:** 612–378–3505

All written and visual data contained in this document reflects the latest product information available at the time of publication. Graco reserves the right to make changes at any time without notice.

Original instructions. This manual contains English. MM 308147

Graco Headquarters: Minneapolis
International Offices: Belgium, China, Japan, Korea

GRACO INC. P.O. BOX 1441 MINNEAPOLIS, MN 55440–1441
Copyright 1997, Graco Inc. is registered to ISO 9001
www.graco.com
Revised 02/2010